Workshop Manual

Caddy Kasten/Kombi 1996 ➤
Polo Classic 1996 ➤
Polo Variant 1998 ➤

Electrical System Caddy from 1996, Polo Classic to 1999, Polo Variant to 1999

Edition 04.2005

Protected by copyright. Copying for private or commercial purposes, in part or in whole, is not permitted without the consent of Volkswagen AG. Volkswagen AG does not guarantee or accept any liability with respect to the correctness of information in this document. Copyright by Volkswagen AG.

satelettronica

List of Workshop Manual Repair Groups

Protected by copyright. Copying for private or commercial purposes, in part or in whole, is not permitted unless authorised by Volkswagen AG. Volkswagen AG does not guarantee or accept any liability with respect to the correctness of information in this document. Copyright by Volkswagen AG.

Repair Group

01 - Self-diagnosis
27 - Starter, current supply, CCS
90 - Gauges, instruments
92 - Windscreen wash/wipe system
94 - Lights, bulbs, switches - exterior
96 - Lights, bulbs, switches - interior
97 - Wiring

satelettronica

Technical information should always be available to the foremen and mechanics, because their careful and constant adherence to the instructions is essential to ensure vehicle road-worthiness and safety. In addition, the normal basic safety precautions for working on motor vehicles must, as a matter of course, be observed.

All rights reserved.
No reproduction without prior agreement from publisher.

Copyright © 2015 Volkswagen AG, Wolfsburg

K0056569820

Contents

01 - Self-diagnosis 1

1 **Vehicle diagnosis, testing and information systems** 1
1.1 Connecting vehicle diagnosis, testing and information system VAS 5051A 2
2 **Immobilizer self-diagnosis** 4
2.1 Performing immobilizer self-diagnosis 4
2.2 Fault table 9
2.3 Reading data block 11
2.4 Coding immobilizer control unit J362 13
3 **Guided functions for immobilizer** 15
3.1 Observe additional information and perquisites for “online request with GeKo-VW” 15
3.2 Online system test 16
3.3 Adaptation of ignition keys 16
3.4 Adaption (matching) after changing engine control unit 17
3.5 Adapting immobilizer 17

27 - Starter, current supply, CCS 18

1 **Battery** 18
1.1 Battery contents list 18
1.2 Fundamentals for batteries 18
1.3 Battery handling instructions 19
1.4 Batteries with magic eye 21
1.5 Batteries with no magic eye 23
1.6 Checking specific gravity 26
1.7 Battery load test 29
1.8 Charging battery 30
1.9 Removing and installing battery 31
1.10 Explanation of central gas venting 35
2 **Starter** 37
2.1 Removing and installing starter (1.4 l petrol engine) 37
2.2 Removing and installing starter (1.6 l, 1.8 l petrol engines and diesel engines) 38
3 **Alternator** 41
3.1 Assembly overview 41
3.2 Poly-V-belt drives 51
3.3 Checking V-belt 52
3.4 Checking poly-V-belt 53
3.5 Removing and installing poly-V-belt 53
3.6 Compact alternator with poly-V-belt drive, vehicles ‣ 04.99 58
3.7 Checking carbon brushes for alternator, vehicles ‣ 04.99 58
3.8 Removing and installing voltage regulator for alternator, vehicles ‣ 04.99 59
3.9 Compact alternator with poly-V-belt drive, vehicles 05.99 ‣ 59
3.10 Checking carbon brushes for alternator, vehicles 05.99 ‣ 60
3.11 Removing and installing voltage regulator for alternator, vehicles 05.99 ‣ 60
3.12 Renewing poly-V-belt pulley on alternator 61
3.13 Removing and installing poly-V-belt pulley with freewheel 62

90 - Gauges, instruments 64

1 **Dash panel insert** 64
1.1 Removing and installing dash panel insert 64
1.2 Renewing bulbs in dash panel insert (VDO) 65
1.3 Renewing bulbs in dash panel insert (MOTOMETER) 66
1.4 Dash panel insert warning lamp symbols (VDO unit) 67
1.5 Pin assignment on dash panel insert 68

Protected by copyright. Copying for private or commercial purposes, in part or in whole, is not permitted unless authorised by Volkswagen AG. Volkswagen AG does not guarantee or accept any liability with respect to the correctness of information in this document. Copyright by Volkswagen AG.

satelettronica

2 Service interval display . . . 69
2.1 Service interval display . . . 69
2.2 Resetting service interval display . . . 69
2.3 Flexible service interval display . . . 70
2.4 Resetting flexible service interval display . . . 70
2.5 Entering service interval data . . . 71

92 - Windscreen wash/wipe system . . . 73
1 Windscreen wiper system . . . 73
1.1 Assembly overview - windscreen wiper system . . . 73
1.2 Removing and installing windscreen wiper system . . . 74
1.3 Removing and installing wiper rubber blade . . . 78
2 Windscreen washer and headlight washer system . . . 79
2.1 Assembly overview - windscreen washer and headlight washer system . . . 79
2.2 Adjusting windscreen washer system jets . . . 79
2.3 Adjusting headlight washer system jets . . . 80
2.4 Removing windscreen washer system spray jets . . . 81
2.5 Removing headlight washer system spray jets . . . 81
2.6 Removing windscreen washer and headlight washer system reservoir . . . 81
3 Rear window wipe/wash system . . . 83
3.1 Assembly overview - rear window wiper system (Caddy) . . . 83
3.2 Assembly overview - rear window wiper system (Polo Variant) . . . 84
3.3 Adjusting rear window wiper park position . . . 84
3.4 Adjusting washer jet . . . 85
3.5 Removing rear window wiper (Caddy) . . . 86
3.6 Removing rear window wiper system (Polo Variant) . . . 87

94 - Lights, bulbs, switches - exterior . . . 89
1 Headlight . . . 89
1.1 Assembly overview - headlight . . . 89
1.2 Adjusting headlights . . . 90
1.3 Removing and installing headlight . . . 90
1.4 Replacing headlight bulb . . . 90
1.5 Removing and installing headlight range control motor . . . 91
2 Front fog lights . . . 93
2.1 Removing and installing fog light . . . 93
2.2 Removing and installing fog light bulb . . . 93
3 Front turn signals . . . 94
3.1 Removing and installing front turn signal . . . 94
3.2 Removing and installing turn signal bulb . . . 94
4 Side mounted repeater turn signals . . . 95
4.1 Removing and installing side mounted repeater turn signal . . . 95
5 Tail lights . . . 96
5.1 Assembly overview - tail light (Caddy) . . . 96
5.2 Assembly overview - tail light (Polo Classic) . . . 96
5.3 Assembly overview - tail light (Polo Variant) . . . 97
5.4 Removing and installing tail light bulb holder (Caddy) . . . 98
5.5 Removing and installing tail light bulb holder (Polo Variant) . . . 99
5.6 Removing and installing tail light bulb holder (Polo Classic) . . . 99
6 Additional brake lights . . . 100
6.1 Additional brake light (Polo Classic) . . . 100
6.2 Additional brake light (Polo Variant) . . . 101
7 Number plate lights . . . 103
7.1 Number plate light (Polo Classic) . . . 103

Copyright by Volkswagen AG. Volkswagen AG does not guarantee or accept any liability with respect to the correctness of information in this document. Proprietary and confidential. Copyright by Volkswagen AG. Reproduction and distribution only permitted for internal purposes, in part or in whole, with the express authorisation by Volkswagen AG.
satelettronica

7.2 Number plate light (Caddy) . . . 104
7.3 Number plate light (Polo Variant) . . . 104

8 Steering column switch and ignition and starter switch . . . 106
8.1 Assembly overview - steering column . . . 106
8.2 Removing and installing steering column switch . . . 107
8.3 Pin assignment on steering column switch . . . 109
8.4 Removing and installing steering lock housing . . . 110
8.5 Removing and installing lock cylinder . . . 113
8.6 Removing and installing ignition / starter switch . . . 114
8.7 Pin assignment for ignition switch . . . 114

96 - Lights, bulbs, switches - interior . . . 115

1 Immobilizer . . . 115
1.1 Assembly overview - immobilizer . . . 115
1.2 Removing and installing immobilizer control unit J362 . . . 115
1.3 Removing and installing immobilizer reader coil D2 . . . 116
1.4 Transponder . . . 116

2 Interior lights and switches . . . 117
2.1 Assembly overview - switches in dash panel . . . 117
2.2 Removing and installing light switch E1 . . . 117
2.3 Removing and installing switches in centre of dash panel . . . 118
2.4 Interior light . . . 118
2.5 Removing and installing glove compartment light W6 . . . 120
2.6 Removing and installing door contact switch . . . 120
2.7 Removing and installing luggage compartment light switch . . . 120
2.8 Removing and installing luggage compartment light W3 . . . 121

97 - Wiring . . . 122

1 Removing and installing relay plate, coupling station and fuse holder . . . 122
1.1 Removing and installing relay plate . . . 122
1.2 Removing and installing multi-pin connector on back of relay plate . . . 123

2 Wiring harness and connector repairs . . . 124
2.1 Notes on safety . . . 124
2.2 General notes concerning repairs to vehicle electrical system . . . 124
2.3 Notes on repairs to wiring harness and connectors . . . 124
2.4 Supplementary notes on repair of CAN bus wiring . . . 125
2.5 Wiring harness repair set V.A.G 1978 . . . 125

3 Renewal of aerial wiring . . . 127
3.1 General description . . . 127
3.2 Assembly overview - aerial wire . . . 127
3.3 Installing a new aerial wire . . . 127

Protected by copyright. Copyright by Volkswagen AG.
Reproduction or publication in whole or part prohibited unless authorized by Volkswagen AG. Volkswagen AG does not guarantee or accept any liability with respect to the correctness of information in this document.
satelettronica

Protected by copyright. Copying for private or commercial purposes, in part or in whole, is not permitted unless authorised by Volkswagen AG. Volkswagen AG does not guarantee or accept any liability with respect to the correctness of information in this document. Copyright by Volkswagen AG.

satelettronica

01 – Self-diagnosis

1 Vehicle diagnosis, testing and information systems

WARNING

- *During testing or measuring operations using a vehicle diagnosis information system, there is a risk of serious or even fatal injury!*
- *If the vehicle diagnosis information system is lodged in the activity area of an airbag during a testing or measuring operation, a triggered airbag can result in serious or even fatal injury!*
- *During testing and measuring operations, work with a second person who can operate the vehicle diagnosis information system from one of the back seats.*

Note

- *All the operations described, e.g. adaption, coding etc. can be performed using the vehicle diagnosis, testing and information system -VAS 5051A- , the vehicle diagnosis, testing and information system -VAS 5051B- or the vehicle diagnosis and service information system -VAS 5052- .*
- *Additional information:*

⇒ Self-study programme No. 202 ; Vehicle Diagnosis, Testing and Information System VAS 5051

⇒ Self-study programme No. 256 ; VAS 5052

⇒ Self-study programme No. 294 ; Online connection of VAS 5051

⇒ Self-study programme No. 295 ; Diagnosis with VAS 5051, VAS 5052 or VAS 5053

– Connecting vehicle diagnosis, testing and information system -VAS 5051A- ⇒ page 2 .

Note

All other and the following vehicle diagnosis, testing and information systems or vehicle diagnosis and service information systems are connected accordingly as described in the chapter "Connecting vehicle diagnosis, testing and information system VAS 5051A".

satelettronica
Protected by copyright. Copying for private or commercial purposes, in part or in whole, is not permitted unless authorised by Volkswagen AG. Volkswagen AG does not guarantee or accept any liability with respect to the correctness of information in this document. Copyright by Volkswagen AG.

Protected by copyright. Copying for private or commercial purposes, in part or in whole, is not permitted unless authorised by Volkswagen AG. Volkswagen AG does not guarantee or accept any liability with respect to the correctness of information in this document. Copyright by Volkswagen AG.

1.1 Connecting vehicle diagnosis, testing and information system -VAS 5051A-

Note

Observe the latest operating instructions for vehicle diagnosis, testing and information system -VAS 5051A- , which are displayed after selecting the "Administration" and "Operating Manual" buttons.

Special tools and workshop equipment required

- Vehicle diagnosis, testing and information system -VAS 5051A-

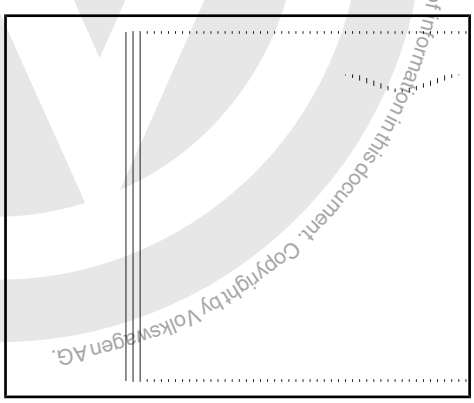

- Diagnosis cable -VAS 5051/6A- (5 m)

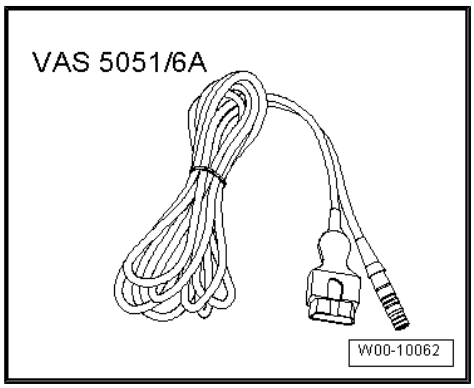

- Diagnosis cable -VAS 5051/5A- (3 m)

Note

Only these cables are to be used for diagnosis, as they are the only ones fitted with CAN wiring and therefore allowing CAN diagnosis and/or CAN communication.

Connecting vehicle diagnosis, testing and information system -VAS 5051A- :

– Apply handbrake.

– Vehicles with an automatic gearbox, move selector lever to position "P" or "N".

– Vehicles with manual gearbox, move gearstick to neutral position.

– Open the compartment on the driver side and unhook it.

satelettronica

– With ignition switched off, connect vehicle diagnosis, testing and information system -VAS 5051A- using diagnosis cable -VAS 5051/6A- to diagnostic interface -arrow- in vehicle.
– Switch on ignition.
– Switch off all electrical consumers.

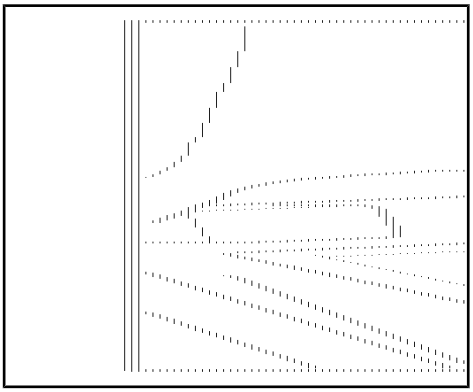

Protected by copyright. Copying for private or commercial purposes, in part or in whole, is not permitted unless authorised by Volkswagen AG. Volkswagen AG does not guarantee or accept any liability with respect to the correctness of information in this document. Copyright by Volkswagen AG.

satelettronica

Protected copyright. Copying for private or commercial purposes, in part or in whole, is not permitted unless authorised by Volkswagen AG. Volkswagen AG does not guarantee or accept any liability with respect to the correctness of information in this document. Copyright by Volkswagen AG.

2 Immobilizer self-diagnosis

Note

- *In Germany the "online request with GeKo-VW" replaces the request of the 7 character PIN as of 01.07.2004.*
- *In other countries the "online request" replaces the request of the 7 character PIN as of 01.10.2004.*
- *Immobilizer self-diagnosis is now only possible with vehicle diagnosis, testing and information system -VAS 5051 A- or the vehicle diagnosis and service information system -VAS 5052- .*
- *Not all self-diagnosis functions are possible due to the change-over to "online request with GeKo-VW".*
- *The functions which are no longer possible are replaced by the programs in "guided functions"* *⇒ page 5* *.*

General description:

First generation immobilizers are installed on vehicles up to 11.97.

Communications between the immobilizer control unit and the engine control unit take place on the W-wire.

The second generation of immobilizer was introduced from 12.97.

Communications between the immobilizer control unit and the engine control unit take place on the W-wire.

The immobilizer electronics consist of:

- An immobilizer control unit.
- An adapted (matched) engine control unit.
- A reader coil on ignition lock.
- And adapted (matched) ignition keys with electronic components (transponder and response reader memory).

2.1 Performing immobilizer self-diagnosis

Note

- *Not all self-diagnosis functions are possible due to the change-over to "online request with GeKo-VW".*
- *The functions which are no longer possible are replaced by the programs in "guided functions"* *⇒ page 5* *.*

2.1.1 Initiating immobilizer self-diagnosis

– Connect vehicle diagnosis, testing and information system -VAS 5051A- ⇒ page 1 or vehicle diagnosis and service information system -VAS 5052- ⇒ page 1 .

satelettronica

Indicated on display:

– Press key on screen for “vehicle self-diagnosis” -arrow-.

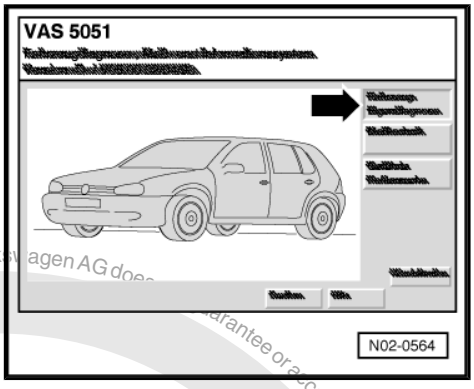

Indicated on display:

– Press “25 - Immobilizer” on screen -arrow-.

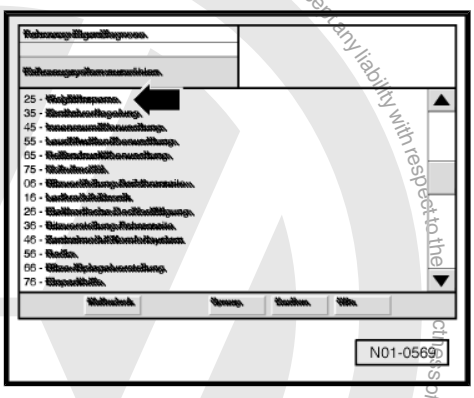

Indicated on display:

The control unit identification and the code are displayed.

- Selected address word.
- Control unit part no.
- System designation (IMMO), version number.
- Code number[1)].
- Dealership number[2)].

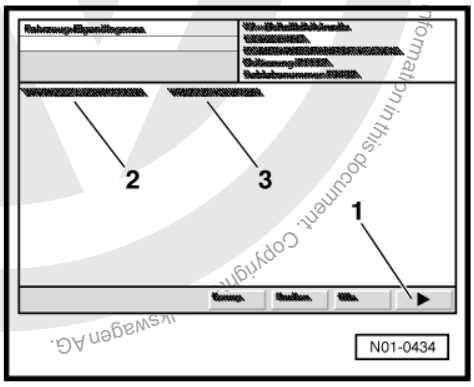

1) Depending on engine, gearbox and optional equipment.

2) Will be automatically stored in the control unit when entering the system.

The display also shows the 17-digit chassis number (WVW....) -2- and the 14-digit identification number (VW....) -3-.

– Press the arrow key -1- in the display.

2.1.2 Overview of functions available in self-diagnosis

– Initiating immobilizer self-diagnosis ⇒ page 4 .

Protected by copyright. Copying for private or commercial purposes, in part or in whole, is not permitted unless authorised by Volkswagen AG. Volkswagen AG does not guarantee or accept any liability with respect to the correctness of information in this document. Copyright by Volkswagen AG.
satelettronica

Indicated on display:

Functions	Page
02 - Reading fault memory	⇒ page 6
05 - Erasing fault memory	⇒ page 7
06 - Ending output	⇒ page 8
07 - Code control unit	⇒ page 13
08 - Read data block	⇒ page 11

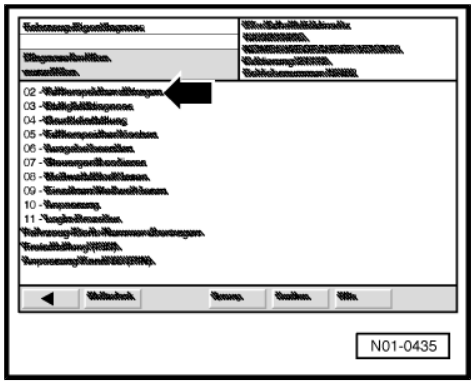

Note

The following functions are no longer possible in self-diagnosis but are replaced by the programs in "Guided functions".

- 10 - Adaption
- Transfer vehicle identification number
- Enable (PIN)
- Adaptation of channel 50 (PIN)

"Guided functions" ⇒ page 15 .

2.1.3 Reading fault memory

– Initiating immobilizer self-diagnosis ⇒ page 4 .

Indicated on display:

– Press "02 - Read fault memory" on screen -arrow-.

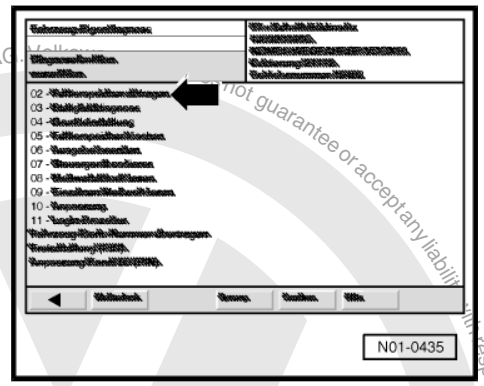

Note

The displayed fault information is only updated when the self-diagnosis is started or the function 05 "Erase fault memory" is selected. The information is not continuously updated.

Any stored faults are shown on the display:

– Press "Print" key on display -arrow- and then on "Screen" in subsequent print menu.

The printer of vehicle diagnosis, testing and information system - VAS 5051 A- then prints out either the faults displayed on the screen or "0 fault recognised". Repair measures are required if any faults are stored. The fault print-out is needed for the repairs.

– End output ⇒ page 8 .

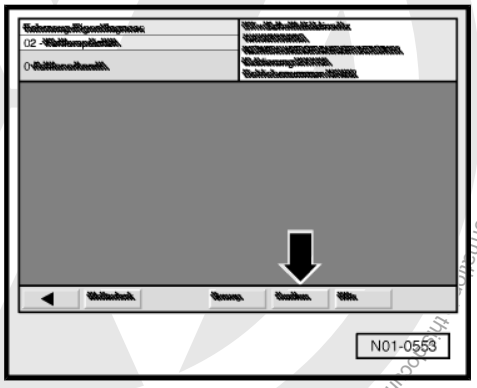

satelettronica
Protected by copyright. Copying for private or commercial purposes, in part or in whole, is not permitted unless authorised by Volkswagen AG. Copyright by Volkswagen AG. Volkswagen AG does not guarantee or accept any liability with respect to the correctness of information in this document.

2.1.4 Erasing fault memory

Note

After erasing the fault memory its contents will be automatically displayed. If the fault memory cannot be erased, read the fault memory again and repair any faults found.

Prerequisites:

- Fault memory read ⇒ page 6 .
- All faults repaired.

After subsequent reading of fault memory, indicated on display:

– Press “05 - Erase fault memory” on screen -arrow-.

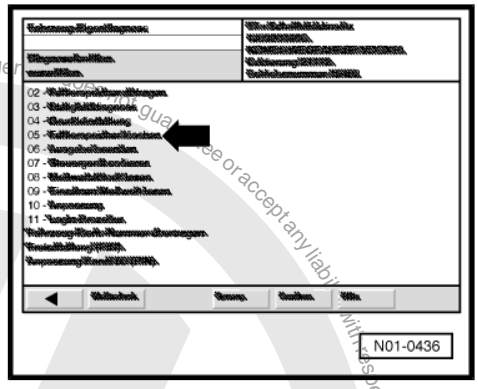

Indicated on display:

– Confirm the message -arrow-.

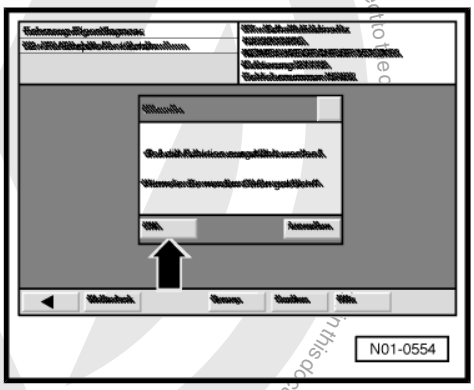

Indicated on display:

The fault memory is now erased.

– End output ⇒ page 8 .

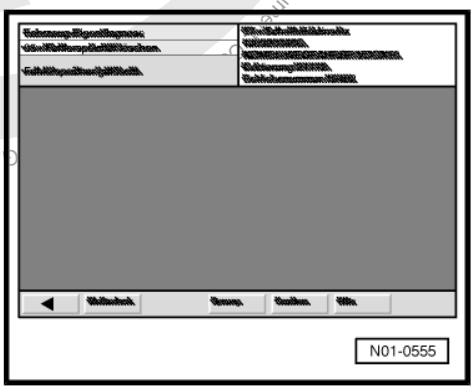

Protected by copyright. Copying for private or commercial purposes, in part or in whole, is not permitted unless authorised by Volkswagen AG. Volkswagen AG does not guarantee or accept any liability with respect to the correctness of information in this document.
satelettronica

2.1.5 Ending output

Indicated on display:

– Press “GoTo” on the display -arrow-.

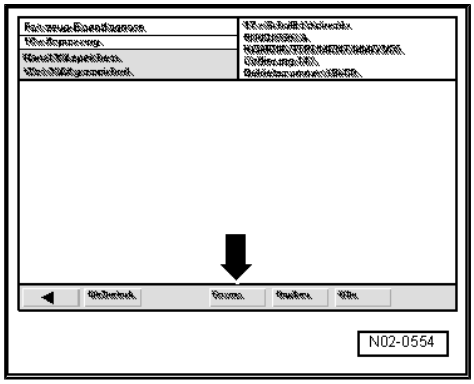

Indicated on display:

– Press “End” on the display -arrow-.
– Press “End” key in “exit menu”.
– Switch ignition off and disconnect diagnosis connector.

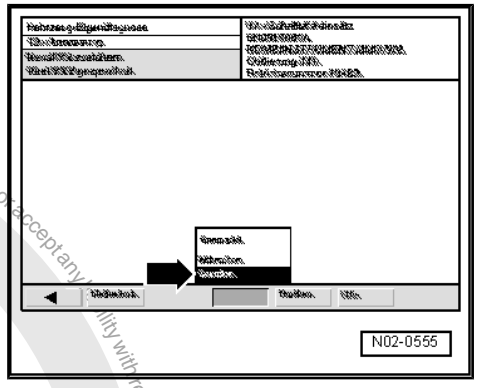

Protected by copyright. Copying for private or commercial purposes, in part or in whole, is not permitted unless authorised by Volkswagen AG. Volkswagen AG does not guarantee or accept any liability with respect to the correctness of information in this document. Copyright by Volkswagen AG.

satelettronica

2.2 Fault table

Note

- *In addition after repairs, always read fault memory of engine control unit to erase content "Engine control unit blocked" of fault memory.*
- *Other stored faults must be evaluated and rectified if necessary*
- *All 'static' and 'sporadic' faults are stored in the fault memory. A fault is recognized as 'static' if it is present for a minimum of 2 seconds. If a fault is then no longer present it is stored as a 'sporadic' fault.*
- *After switching on the ignition, any faults stored are initially set to 'sporadic' and are then changed to 'static' if they are still present after the check has been completed.*
- *If a 'sporadic' fault is no longer present during the next 50 driving cycles (ignition on for a minimum of 2 seconds) it is erased.*
- *The list below contains all possible faults which can be recognised by the immobilizer control unit -J362- and indicated on the display of the vehicle diagnosis, testing and information system -VAS 5051A- or vehicle diagnosis and service information system -VAS 5052- , listed according to 5-digit fault code.*
- *Before renewing a component shown as faulty, check wiring and connections to the component as well as earth connections referring to current flow diagram.*
- *Correct seating of connections and locking devices on relay plate must also be checked.*
- *After repairs, always read the fault memory again with the vehicle diagnosis, testing and information system -VAS 5051A- or vehicle diagnosis and service information system -VAS 5052- and erase, then subsequently read the fault memory.*

Indicated on display	Possible fault cause	Fault elimination
No fault recognized!	The self-diagnosis is finished If "No fault recognized" appears after completing repairs.	
00546 Data wiring defective. Implausible signal.	No signal or implausible signal on the "W" wiring between the immobilizer control unit and the engine control unit or the fuel shut-off valve control unit.	– Check wiring for open circuit or short circuit.
	The baud rate (data transmission rate) of the immobilizer control unit is incorrect.	– Code the control unit and input the correct baud rate ⇒ page 13 .
	Incorrect operation: The ignition was immediately switched back on after stopping the engine (i.e. during the shutdown phase).	– Switch ignition off, wait at least 10 seconds, switch ignition back on and then select function 02 "Read fault memory" again ⇒ page 6 .
	Immobilizer control unit -J362- defective.	– Erase fault memory ⇒ page 7 and read memory again ⇒ page 6 . – Replace immobilizer control unit -J362- if necessary.
01128		

satelettronica

Indicated on display	Possible fault cause	Fault elimination
Immobilizer reader coil -D2-	3-pin connector not connected at control unit or reader coil and wiring defective. Immobilizer control unit -J362- defective.	– Check connector, reader coil and wiring (visual check), if necessary renew reader coil. – Erase fault memory ⇒ page 7 and read memory again ⇒ page 6 . – Replace immobilizer control unit -J362- if necessary.
01176 Key Signal too low.	Reader coil or wire defective (contact resistance/loose contact). Electronic component in ignition key (transponder) missing or does not work. Wrong transponder type in ignition key.	– Check reader coil with wiring and connector (visual check), if necessary renew reader coil. – Renew ignition key, perform new adaptation for all ignition keys and check operation ⇒ page 16 .
Not authorized.	Key fits mechanically, but adaptation routine has not been performed.	– Re-match all ignition keys and check operation ⇒ page 16 .
01177 Engine control unit. Not authorized.	Adaptation routine not performed for engine control unit or fuel shut-off valve control unit. W-wire between the control units is OK.	– Perform adaptation routine for engine control unit or fuel shut-off valve control unit ⇒ page 17 .
01179 Key programming incorrect.	Ignition key adaptation is faulty. Electronic component in ignition key (transponder) missing or does not work. Wrong transponder type in ignition key.	– Re-match all ignition keys and check operation ⇒ page 16 . – Renew ignition key, perform new adaptation for all ignition keys and check operation ⇒ page 16 .
01181 Initialisation: only 2 keys learned.	During initial adaptation the ignition was switched on a third time with one of the ignition keys for longer than 1 second . Only two ignition keys can be adapted during initial adaptation.	– Erase fault memory ⇒ page 7 and read memory again ⇒ page 6 .
01202 Diagnosis cable. Short circuit.	Short circuit between wires of connector, 6-pin, chambers 2 and 3 (“W” and “K”) on immobilizer control unit -J362- . Short circuit between wires of connector, 8-pin, chambers 7 and 8 (“W” and “K”) on immobilizer control unit -J362- . Short circuit between wires of connector, 10-pin, chambers 7 and 8 (“W” and “K”) on immobilizer control unit -J362- . Immobilizer control unit -J362- defective.	– Check connection and, if necessary, rectify fault referring to current flow diagram. – Check connection and, if necessary, rectify fault referring to current flow diagram. – Check connection and, if necessary, rectify fault referring to current flow diagram. – Erase fault memory ⇒ page 7 and read memory again ⇒ page 6 . – Replace immobilizer control unit -J362- if necessary.
01237 Fuel shut-off valve -N109-		

Copyright by Volkswagen AG. Volkswagen AG does not guarantee or accept any liability with respect to the correctness of information in this document. Copying for private or commercial purposes, in part or in whole, is not permitted unless authorised by Volkswagen AG.
satelettronica

Indicated on display	Possible fault cause	Fault elimination
Defective.	Fuel shut-off valve control unit or fuel shut-off valve defective.	– Remove fuel shut-off valve control unit and disconnect electric wiring. – Temporarily apply battery voltage (term. 30) to fuel shut-off valve (use measuring tool set -V.A.G 1594/C-): ♦ Fuel shut-off valve clicks audibly ⇒ renew fuel shut-off valve control unit. ♦ Fuel shut-off valve does not click ⇒ renew fuel shut-off valve.
65535 Control unit. Defective.	Short circuit between wires of connector, 6-pin, chambers 2 and 3 (“W” and “K”).	– Rectify fault referring to current flow diagram.
	Short circuit between wires of connector, 8-pin, chambers 7 and 8 (“W” and “K”).	– Rectify fault referring to current flow diagram.
	Short circuit between wires of connector, 10-pin, chambers 7 and 8 (“W” and “K”).	– Rectify fault referring to current flow diagram.
	The immobilizer control unit -J362- does not recognise the correct Baud rate (data transfer speed).	– Replace immobilizer control unit -J362- .
	Immobilizer control unit -J362- defective.	– Replace immobilizer control unit -J362- .

2.3 Reading data block

– Initiating immobilizer self-diagnosis ⇒ page 4 .

Indicated on display:

– Press “08 - Read data block” on the display -arrow-.

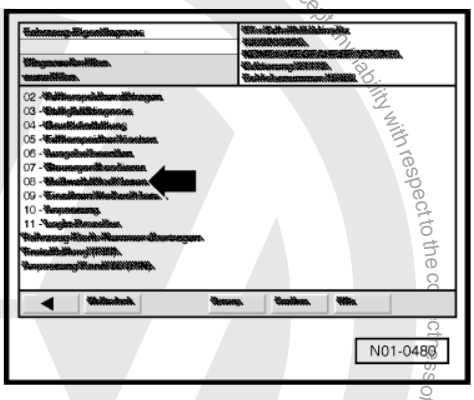

Indicated on display:

– Press number of data block to be read on number block on display -arrow- and confirm entry with Q key.

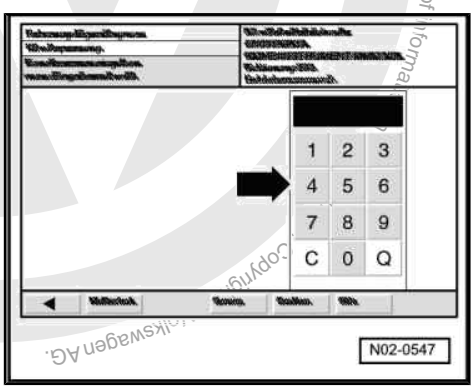

Example of data block contents

– On the number pad on the display, click on 0, 0 and 1 and then click on the Q key to confirm the entry.

Protected by copyright. Copyright by Volkswagen AG. Volkswagen AG does not guarantee or accept any liability with respect to the correctness of information in this copy, in whole or in part, is not permitted unless authorised by Volkswagen AG. Volkswagen AG does not guarantee or accept any liability with respect to the correctness of information in this copy, in whole or in part, is not permitted unless authorised by Volkswagen AG.
satelettronica

Indicated on display:

If there is a “0” in the first display zone then the reader coil is faulty.

If there is a “1” in the first display zone then the reader coil is OK.

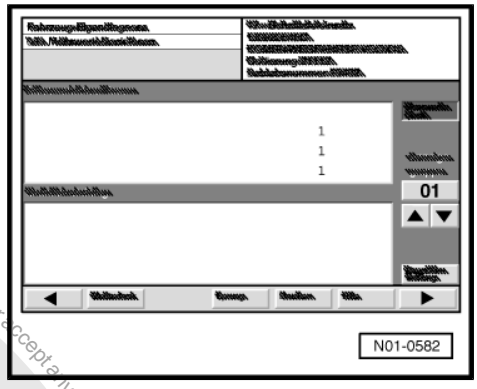

Protected by copyright. Copyright by Volkswagen AG. Volkswagen AG does not guarantee or accept any liability with respect to the correctness of information in this document. Copying for private or commercial purposes, in part or in whole, is not permitted unless authorised by Volkswagen AG.

2.3.1 Overview of selectable display numbers, significance of display zones and display possibilities for vehicles ▸ 11.97

Overview of selectable display groups:

Display group	Display zone in display
001	1 = reader coil 2 = key status 3 = key authorised

Note

- *The data block always indicates the active status of the immobilizer at the point just after the ignition was switched on.*
- *If an electrical fault occurs which changes this condition after the ignition is switched on, it will not be displayed until the ignition is switched on again and the function “Read data block” is called up.*

Significance of display zones and display possibilities for display group 001:

Display example	Display zone	Possible display
1	1 = Reader coil	0 = faulty 1 = OK
1	2 = Key status	0 = defective 1 = OK
1	3 = Authorised key	0 = no 1 = yes

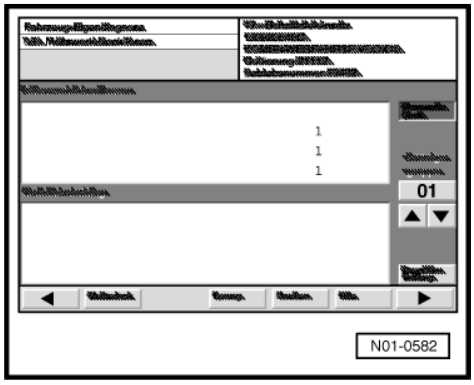

2.3.2 Overview of selectable display groups; significance of display zones and display possibilities 12.97 ▸

Overview of selectable display groups:

Display group	Display zone in display
001	1 = No. of keys learned 2 = Reader coil 3 = Key status 4 = Key authorised

satelettronica

Display group	Display zone in display
002	1 = Key learning time in seconds 2 = Target no. of keys 3 = Actual no. of keys 4 = Status of key adaptation

Note

- *The data block always indicates the active status of the immobilizer at the point just after the ignition was switched on.*
- *If an electrical fault occurs which changes this condition after the ignition is switched on, it will not be displayed until the ignition is switched on again and the function "Read data block" is called up.*

Significance of display zones and display possibilities for display group 001:

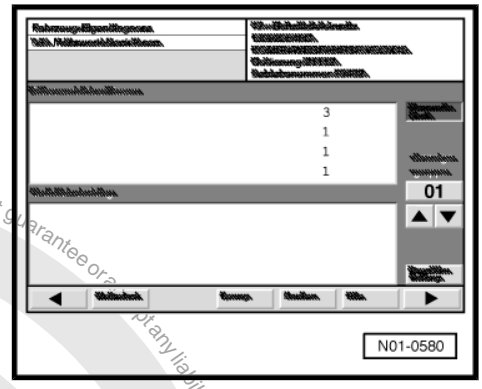

Display example	Display zone	Possible display
3	1 = Number of learned keys	0 = minimum 8 = maximum
1	2 = Reader coil	0 = faulty 1 = OK
1	3 = Key status	0 = defective 1 = OK
1	4 = Authorised key	0 = no 1 = yes

Significance of display zones and display possibilities for display group 002:

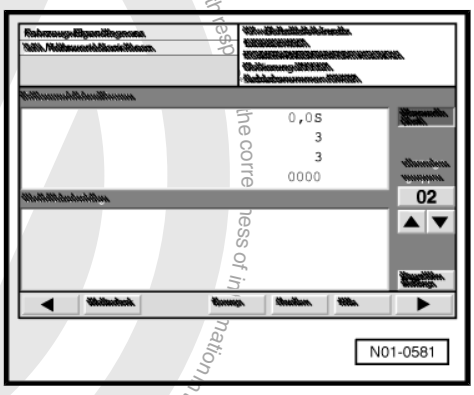

Display example	Display zone	Possible display
0.0 s	1 = Key learning time	Learning time in seconds
3	2 = Set number of keys	0 = minimum 8 = maximum
3	3 = Actual number of keys	0 = minimum 8 = maximum
0000	4 = Status of key adaptation ◆ Fault status ◆ Adaption ◆ Current key ◆ Current adaptation	0XXX = no fault 1XXX = fault X0XX = finished X1XX = running XX0X = OK XX1X = not OK XXX0 = OK XXX1 = not OK

2.4 Coding immobilizer control unit -J362-

– Coding immobilizer control unit -J362- , vehicles ‣ 11.97 ⇒ page 14 .

– Coding immobilizer control unit -J362- , vehicles 12.97 ‣ ⇒ page 14 .

Protected by copyright. Copyright by Volkswagen AG. Copy or reproduction, in part or in whole, is not permitted unless authorised by Volkswagen AG. Volkswagen AG does not guarantee or assume any liability with respect to the correctness of information in this document.
satelettronica

2.4.1 Coding immobilizer control unit -J362- , vehicles ▸ 11.97

– Initiating immobilizer self-diagnosis ⇒ page 4 .

Indicated on display:

– Press “07 - Code control unit” on the display -arrow-.

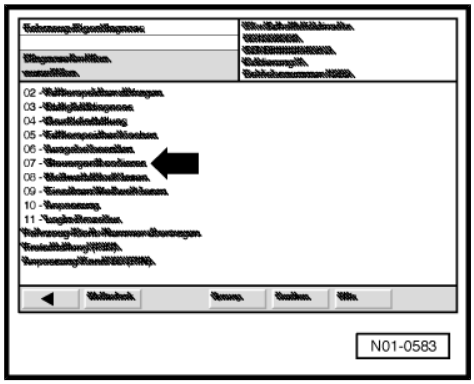

Indicated on display:

Following codings are possible:

- 09600 - Petrol engine, TDI and SDI engine
- 02400 - Diesel engine, except TDI and SDI engine

– Press the corresponding keys on the number pad on the display -arrow-.

– Confirm the entry by pressing the 0 key on the number pad on the display.

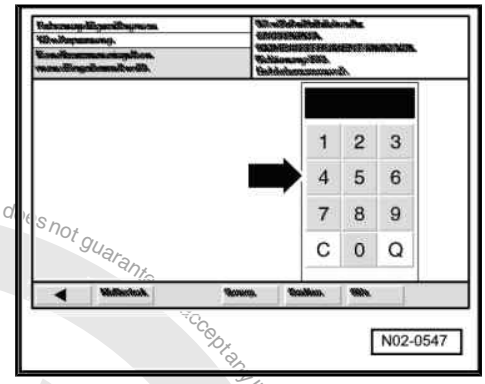

2.4.2 Coding immobilizer control unit -J362- , vehicles 12.97 ▸

Vehicles with a 2nd generation immobilizer: the control unit is equipped with an automatic recognition for the Baud rate. This means that it is not necessary to code the control unit.

The correct data transfer speed between engine control unit or fuel shut-off control unit and immobilizer control unit is automatically stored in the immobilizer control unit after recognition.

Note

- *If the immobilizer control unit cannot detect the correct Baud rate, then the coding is set to the value “00000”.*
- *The fault “Control unit defective” is stored in the fault memory* *⇒ page 11* .

Protected by copyright. Copyright by Volkswagen AG.
Copyright by Volkswagen AG. Volkswagen AG does not guarantee or accept any liability with respect to the correctness of information in this document. Copyright by Volkswagen AG.
satelettronica

Protected by copyright. Copyright by Volkswagen AG. Volkswagen AG does not guarantee or accept any liability with respect to the correctness of information in this document. Copyright by Volkswagen AG. This is a non-commercial publication. Reproduction or communication to third parties is not permitted unless authorised by Volkswagen AG.

3 Guided functions for immobilizer

Note

- *In Germany the "online request with GeKo-VW" replaces the request of the 7 character PIN as of 01.07.2004.*
- *In other countries the "online request" replaces the request of the 7 character PIN as of 01.10.2004.*
- *Immobilizer "adaption" is now only possible with vehicle diagnosis, testing and information system -VAS 5051A- or vehicle diagnosis and service information system -VAS 5052- in operating mode "Guided functions".*
- *Observe additional information and prerequisites for "online request with GeKo-VW"* *⇒ page 15* *.*

General description:

First generation immobilizers are installed on vehicles up to 11.97.

Communications between the immobilizer control unit and the engine control unit take place on the W-wire.

The second generation of immobilizer was introduced from 12.97.

Communications between the immobilizer control unit and the engine control unit take place on the W-wire.

The immobilizer electronics consist of:

- An immobilizer control unit.
- An adapted (matched) engine control unit.
- A reader coil on ignition lock.
- And adapted (matched) ignition keys with electronic components (transponder and response reader memory).

3.1 Observe additional information and perquisites for "online request with GeKo-VW"

Prerequisites:

- At least one vehicle diagnosis, testing and information system -VAS 5051A- or vehicle diagnosis and service information system -VAS 5052- must be "online".
- The user ID and password for GeKo-VW must be entered in the user profile of the dealership system.

Additional information:

The change affects all vehicles with an immobilizer, even older vehicles.

"GeKo-VW" means Secret and Component Protection for Volkswagen Vehicles.

With the introduction of "GeKo-VW" the "PIN" for the immobilizer can only be requested by "online request".

"GeKo-VW" replaces the request for the "7-digit PIN".

With the authorisation of "GeKo-VW" the radio code of a VW radio can be requested via ELSA/FISH.

satelettronica

Note

- *All other information is located in ServiceNet under System/ GeKo-VW - Germany*
- *An "online system test" should be undertaken to check the online connection, the user authorisation and a correct line connection before adapting the immobilizer* ⇒ page 16 *.*

3.2 Online system test

– Connect either the vehicle diagnosis, testing and information system -VAS 5051A- or the vehicle diagnosis and service information system -VAS 5052- ⇒ page 1 .

– Select operating mode "Guided functions" in vehicle diagnosis, testing and information system -VAS 5051A- or vehicle diagnosis and service information system -VAS 5052- .

– Select following menu points one after the other according to Volkswagen brand CD:

- Car rest vehicles
- All model years
- All versions
- All engine codes
- Press "GoTo" key.
- "Immobilizer I and II"
- "Functions of immobilizer I and II"
- "Online system test"

The "online system test" is now a part of the test plan and can be initiated by pressing the "GoTo" key.

3.3 Adaptation of ignition keys

Note

Order a new genuine key via lock number ⇒ Parts catalogue (ETKA) if a key is lost.

– Connect either the vehicle diagnosis, testing and information system -VAS 5051A- or the vehicle diagnosis and service information system -VAS 5052- ⇒ page 1 .

– Select operating mode "Guided functions" in vehicle diagnosis, testing and information system -VAS 5051A- or vehicle diagnosis and service information system -VAS 5052- .

– Select following menu points one after the other according to Volkswagen brand CD:

- Car rest vehicles
- All model years
- All versions
- All engine codes
- Press "GoTo" key.
- "Immobilizer I and II"

Protected by copyright. Copying for private or commercial purposes, in part or in whole, is not permitted unless authorised by Volkswagen AG. Volkswagen AG does not guarantee or accept any liability with respect to the correctness of information in this document. Copyright by Volkswagen AG.
satelettronica

- “Functions of immobilizer I and II”
- “Adaptation of ignition keys”

The “adaption of ignition keys” is now a part of the test plan and can be initiated by pressing the “GoTo” key.

3.4 Adaption (matching) after changing engine control unit

– Connect either the vehicle diagnosis, testing and information system -VAS 5051A- or the vehicle diagnosis and service information system -VAS 5052- ⇒ page 1 .

– Select operating mode “Guided functions” in vehicle diagnosis, testing and information system -VAS 5051A- or vehicle diagnosis and service information system -VAS 5052- .

– Select following menu points one after the other according to Volkswagen brand CD:

- Car rest vehicles
- All model years
- All versions
- All engine codes
- Press “GoTo” key.
- “Immobilizer I and II”
- “Functions of immobilizer I and II”
- “Adaption (matching) after changing engine control unit”

The “adaption after changing engine control unit” is now a part of the test plan and can be initiated by pressing the “GoTo” key.

3.5 Adapting immobilizer

– Connect either the vehicle diagnosis, testing and information system -VAS 5051A- or the vehicle diagnosis and service information system -VAS 5052- ⇒ page 1 .

– Select operating mode “Guided functions” in vehicle diagnosis, testing and information system -VAS 5051A- or vehicle diagnosis and service information system -VAS 5052- .

– Select following menu points one after the other according to Volkswagen brand CD:

- Car rest vehicles
- All model years
- All versions
- All engine codes
- Press “GoTo” key.
- “Immobilizer I and II”
- “Functions of immobilizer I and II”
- “Adapting immobilizer”

The “immobilizer adaption” is now a part of the test plan and can be initiated by pressing the “GoTo” key.

satelettronica

27 – Starter, current supply, CCS

1 Battery

1.1 Battery contents list

Subject	Page
Battery handling instructions	⇒ page 19
Warnings and safety procedures when handling lead-acid batteries	⇒ page 20
Batteries with magic eye	⇒ page 21
Visual check	⇒ page 21
Checking electrolyte level (batteries with magic eye)	⇒ page 22
Batteries with no magic eye	⇒ page 23
Visual check	⇒ page 23
Checking electrolyte level	⇒ page 23
Checking specific gravity	⇒ page 26
Battery load test	⇒ page 29
Charging battery	⇒ page 30
Removing and installing battery	⇒ page 31
Explanation of central gas venting	⇒ page 35

The following chapters contain repair information for the battery.

1.2 Fundamentals for batteries

Note

- *Due to technical reasons in production there are two different types of batteries installed.*
- *Batteries with a magic eye ⇒ page 21 and batteries with no "magic eye" ⇒ page 23 .*
- *The following brief description is intended to provide information about which batteries are fitted due to technical differences.*

1.2.1 Brief description

- Batteries with white housing with lead antimonite coated electrode plates, visible cell plugs and no magic eye (low maintenance).
- Batteries with black housing with lead calcium coated electrode plates, magic eye and sealed cell plugs (maintenance-free).

Protected by copyright. Copy for private or commercial purposes, in part or in whole, is not permitted unless authorised by Volkswagen AG. Volkswagen AG does not guarantee or accept any liability with respect to the correctness of information in this document. Copyright by Volkswagen AG.
satelettronica

Note

In this workshop manual, we have revised and documented the work content and procedures according to the latest information available. This means that checking and servicing batteries will now be easier and time-saving. It is sufficient for you to perform the following work content and procedures and those described in the 'Brief information' and on the following pages for each battery type. As a prerequisite, you must use the tools as prescribed in the workshop manual.

1.2.2 Brief information

- Batteries with magic eye: visual check of housing, battery terminals and clamps, visual check of electrolyte level and specific gravity by means of “magic eye”, if necessary battery load test.
- Batteries without magic eye: visual check of housing, battery terminals and clamps, visual check of electrolyte level, specific gravity check with commercially available hydrometer, if necessary battery load test.

The battery is one of the most important electrical components in a vehicle. A trouble-free battery has a great influence on customer satisfaction. To ensure long use of the battery, the battery must be checked, serviced and maintained according to the instructions in this manual.

Apart from starting, the battery has other tasks: It acts as a buffer and supplies electrical energy to the complete vehicle electrical system.

The battery has also gone through a technical change and further development will continue. But today it is not possible, for reasons of physical/chemical limits, to have a completely maintenance free battery in a vehicle.

Thanks to constructive and physical changes of the positive electrode plates and to lead calcium coating, a new generation of batteries has been manufactured. The advantage of these batteries is the low electrolyte consumption. These batteries remain efficient with a minimum of maintenance and continue so for a long time. Checking charge and electrolyte levels has become easier due to the magic eye. Battery handling instructions for batteries with a magic eye can be found under the heading "Batteries with magic eye".

1.3 Battery handling instructions

- Battery terminals must not be greased.
- Battery terminal clamps must be fitted only by hand without force to prevent damage to battery housing.
- The torque setting for the battery terminal clamp is 6 Nm - arrow-.
- The torque setting for the additional terminals on the battery terminal clamp is 6 Nm.
- Check vehicle equipment (radio, clock and convenience electrics etc.) according to Workshop Manual and/or Owner's Manual when the battery has been disconnected and then reconnected.

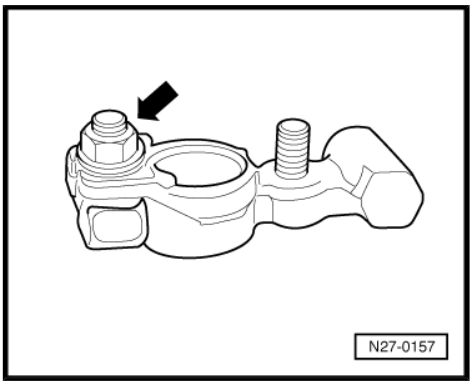

satelettronica

1.3.1 Warnings and safety procedures when handling lead-acid batteries

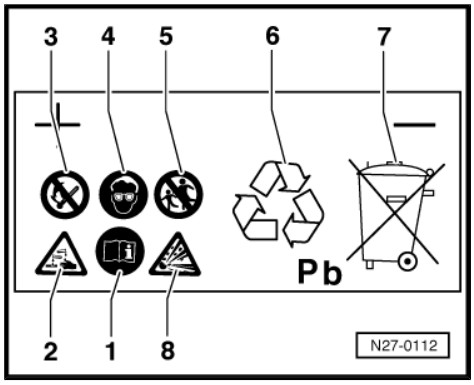

1 - Follow instructions on battery, in electrical system workshop manual and in owner's manual.

2 - Danger of acid burns:

– Battery acid is very caustic; therefore wear eye protection and gloves;

– Do not tilt battery. Electrolyte (acid) can leak out of the gas vents.

3 - Fires, sparks, naked lights and smoking are prohibited:

– Avoid sparks when working with cables and electrical units.

– Avoid short circuits.

4 - Wear eye protection.

5 - Keep children away from acid and batteries.

6 - Disposal:

– Dispose of old batteries at a battery collection point.

7 - Never dispose of old batteries in household waste system!

8 - Danger of explosion:

– A highly explosive gas is produced when batteries are charged.

Protected by copyright. Copying for private or commercial purposes, in part or in whole, is not permitted unless authorised by Volkswagen AG. Volkswagen AG does not guarantee or accept any liability with respect to the correctness of information in this document. Copyright by Volkswagen AG.

satelettronica

1.4 Batteries with magic eye

1.4.1 Identification

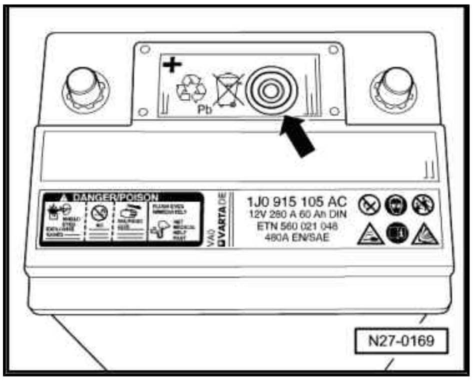

- Batteries with a magic eye are produced with a black housing.
- The magic eye -arrow- provides information concerning the electrolyte level and charge condition.

Note

- *The magic eye can be located at various positions on the battery depending on the manufacturer (e.g. in any of the cell plug positions e.g. second cell plug as viewed from negative terminal).*
- *Three different colour displays are possible:*

– Green → the battery is charged sufficiently.

– Black → not charged or charged insufficiently ⇒ page 30 .

– Colourless or yellow → the critical electrolyte level has been reached, it is absolutely necessary to top-up with distilled water.

- Please note when the magic eye is colourless and the battery is more than 5 years old the battery must be replaced with a new battery.

Note

Air bubbles can form under the magic eye especially if a battery has been charged, i.e. even when the battery is charged during driving. These falsify the colour display of the magic eye.

– Before performing a visual check, tap the magic eye lightly and carefully with the handle of a screwdriver.

The air bubbles will dissipate.

The colour display of the “magic eye” will therefore be more accurate.

1.4.2 Visual check

It is important to first check the condition of the battery visually before any more complicated tests are carried out in order to satisfy the demands on quality expected by our organisation and our customers.

- Check whether the battery housing is damaged. Electrolyte can leak out if the housing is damaged.
- Check whether the battery terminals (battery wire connections) are damaged. The necessary contact on the terminals cannot be guaranteed if the terminals are damaged. When connecting clamps to the terminals, tighten the clamps to the torque specified in this workshop manual. If the clamps are not located correctly and are then tightened, the cable or wiring could spark or burn, which in turn could lead to malfunctions in the electrical system. In such cases, the functionality of the vehicle could be substantially impaired.

Protected by copyright. Copying for private or commercial purposes, in part or in whole, is not permitted unless authorised by Volkswagen AG. Volkswagen AG does not guarantee or accept any liability with respect to the correctness of information in this document. Copyright by Volkswagen AG.

sateelettronica

1.4.3 Checking electrolyte level (batteries with “magic eye”)

Special tools and workshop equipment required

- Battery filler bottle -VAS 5045-

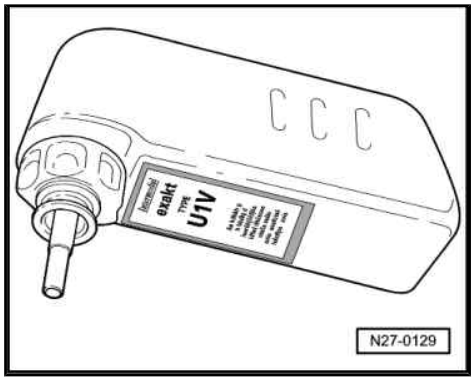

WARNING

When handling battery acid, you must absolutely adhere to the accident prevention procedures.

Suitable protective clothing must be worn.

Use only an electric torch to illuminate the inside of the battery housing.

Never illuminate the inside of a battery housing with an open flame.

Never work with an open flame or burning cigarette in the vicinity of a battery.

Obey all regulations for the disposal of batteries and sulphuric acid when disposing of batteries.

Note

- *The electrolyte level can only be read at the magic eye -arrow-.*
- *If the colour indicator is colourless or yellow, it is absolutely necessary to top-up with distilled water.*

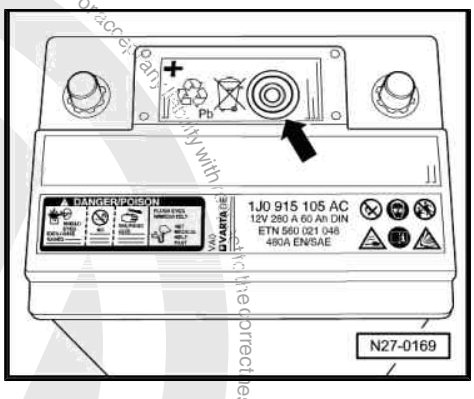

A correct electrolyte level in the battery is an important factor in ensuring a long battery service life.

When the electrolyte level is too low the cell plates project above the surface and there is a loss of battery capacity (loss of power). If the cell plates are not covered by electrolyte (battery acid) the plates, the plate bridges and the cell connections will corrode. This corrosion ensures the battery function can no longer be guaranteed. The battery will be unusable.

If the electrolyte level is too high, damage will be caused outside the battery by the leaking electrolyte (sulphuric acid/water mixture) e.g. components in engine compartment.

Protected by copyright. Copying for private or commercial purposes, in part or in whole, is not permitted unless authorised by Volkswagen AG. Copyright by Volkswagen AG. Volkswagen AG does not guarantee or accept any liability with respect to the correctness of information in this document.
satelettronica

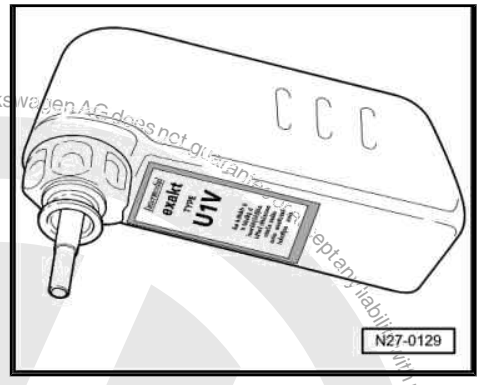

Note

- *If the battery must be topped-up with distilled water, the battery filler bottle -VAS 5045- is the ideal medium for this work process. The design of the filler nozzle prevents any spilling or over filling. Once the max. fill level has been reached, further filling of the battery is prevented due to the special nozzle feature of the battery filler bottle -VAS 5045- .*
- *Use distilled water only, this prevents contamination of the battery electrolyte and the associated increased self discharge.*
- *If, for technical reasons, batteries are equipped with cell plugs, these are covered with a plastic foil.*
- *If in place of a cell plug a magic eye is fitted, this obviously will not be covered.*

– If the electrolyte level is too low, correct as follows:

– Remove battery cell plug.

– Then use the battery filler bottle -VAS 5045- to top-up with distilled water, but only to the max. mark. The battery filler bottle -VAS 5045- is the ideal medium for this work process.

Note

Perform a battery load test if you have top-up the battery with distilled water.

– Battery load test ⇒ page 29 .

1.5 Batteries with no magic eye

1.5.1 Visual check

It is important to first check the condition of the battery visually before any more complicated tests are carried out in order to satisfy the demands on quality expected by our organisation and our customers.

Note

- *Check whether the battery housing is damaged. Electrolyte can leak out if the housing is damaged.*
- *Check whether the battery terminals (battery wire connections) are damaged. The necessary contact on the terminals cannot be guaranteed if the terminals are damaged. Take note when fitting clamps to the terminals that these are tightened to the prescribed torque stated in this Workshop Manual. If the clamps are not located correctly and are then tightened, the cable or wiring could spark or burn, which in turn could lead to malfunctions in the electrical system. In this case the correct functioning of the vehicle systems could be considerably impaired.*

1.5.2 Checking electrolyte level

Special tools and workshop equipment required

Protected by copyright. Copyright by Volkswagen AG.

satelettronica

- Commercially available hydrometer

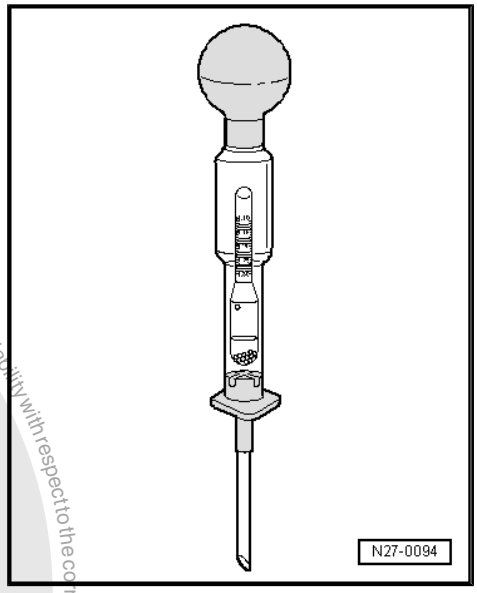

- Battery filler bottle -VAS 5045-

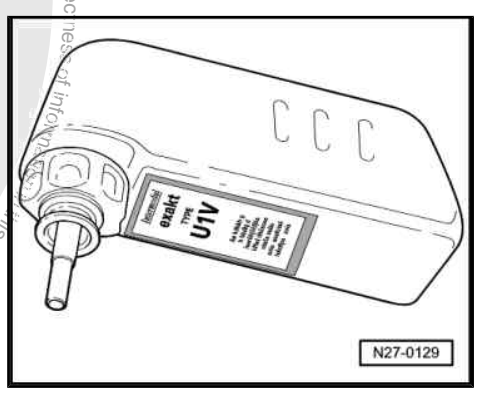

Protected by copyright. Copyright by Volkswagen AG. Copyright by Volkswagen AG. Volkswagen AG does not guarantee or accept any liability with respect to the correctness of information in this document. Copying for private or commercial purposes, in part or in whole, is not permitted unless authorised by Volkswagen AG.

WARNING

When handling battery acid, you must absolutely adhere to the accident prevention procedures.

Suitable protective clothing must be worn.

Use only an electric torch to illuminate the inside of the battery housing.

Never illuminate the inside of a battery housing with an open flame.

Never work with an open flame or burning cigarette in the vicinity of a battery.

Obey all regulations for the disposal of batteries and sulphuric acid when disposing of batteries.

A correct electrolyte level in the battery is an important factor in ensuring a long battery service life.

When the electrolyte level is too low the cell plates project above the surface and there is a loss of battery capacity (loss of power). If the cell plates are not covered by electrolyte (battery acid) the plates, the plate bridges and the cell connections will corrode. This corrosion ensures the battery function can no longer be guaranteed. The battery will be unusable.

satelettronica

If the electrolyte level is too high, damage will be caused outside the battery by the leaking electrolyte (sulphuric acid/water mixture) e.g. components in engine compartment.

A visual check of the battery electrolyte level is all that is required on batteries with recognisable minimum and maximum marks on the battery housing.

– Switch off ignition.

– Check electrolyte level visually at the min. and max. markings on the battery housing.

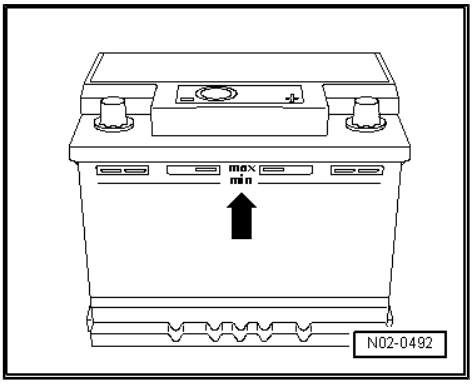

The electrolyte level is OK when the fluid level is between the minimum and maximum marking.

– Check electrolyte level visually. Look inside the battery.

If there are no min. and max. marks on the battery housing or if the electrolyte level cannot be seen. You must remove the cell plugs It is then possible to look inside battery to check electrolyte level.

The electrolyte level is OK when the fluid level is the same height as the visible plastic peg.

The plastic peg equates to the max, marking for the electrolyte level.

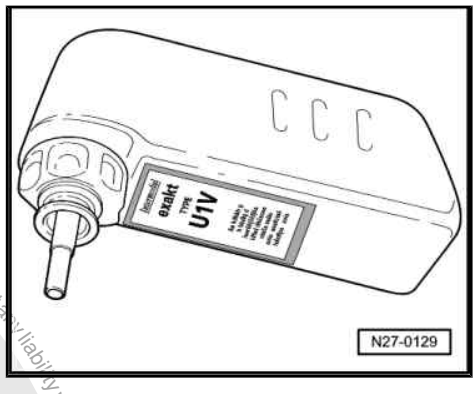

Note

- *If the battery must be topped-up with distilled water, the battery filler bottle -VAS 5045- is the ideal medium for this work process. The design of the filler nozzle prevents any spilling or over filling. Once the max. fill level has been reached, further filling of the battery is prevented due to the special nozzle feature of the battery filler bottle -VAS 5045- .*
- *Use distilled water only, this prevents contamination of the battery electrolyte and the associated increased self discharge.*

– If the electrolyte level is too low, correct as follows:

– Remove battery cell plug.

– Then use the battery filler bottle -VAS 5045- to top-up with distilled water, but only to the max. mark. The battery filler bottle -VAS 5045- is the ideal medium for this work process.

Note

Perform a battery load test if you have top-up the battery with distilled water.

– Battery load test ⇒ page 29 .

Protected by copyright. Copying for private or commercial purposes, in part or in whole, is not permitted unless authorised by Volkswagen AG. Volkswagen AG does not guarantee or accept any liability with respect to the correctness of information in this document. Copyright by Volkswagen AG.
satelettronica

– If electrolyte level is too high, extract excess electrolyte using a commercial hydrometer. The electrolyte level must align with the internal electrolyte level marking.
– Once the battery has been topped-up or the electrolyte level has been reduced to normal the cells must be sealed again using genuine cell plugs.

It is imperative that the original/genuine sealing plugs are used in the battery threaded openings (filling points for battery cells), to ensure the battery is sealed correctly.

Always use genuine sealing plugs of the same type if lost or damaged.

The sealing plugs must be fitted with an O-ring.

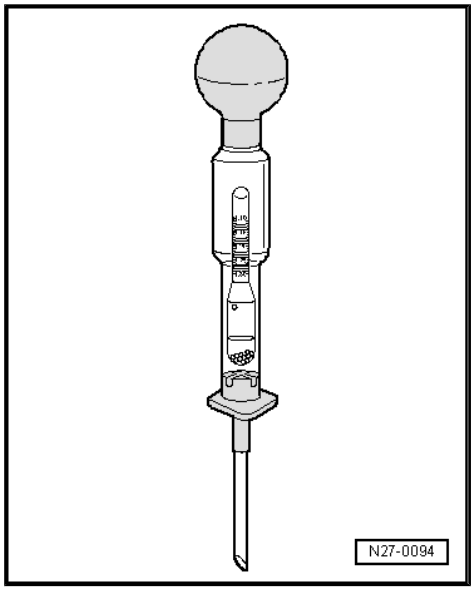

1.6 Checking specific gravity

Note

The following specific gravity test should only be performed on batteries without magic eye.

Special tools and workshop equipment required

♦ Commercially available hydrometer

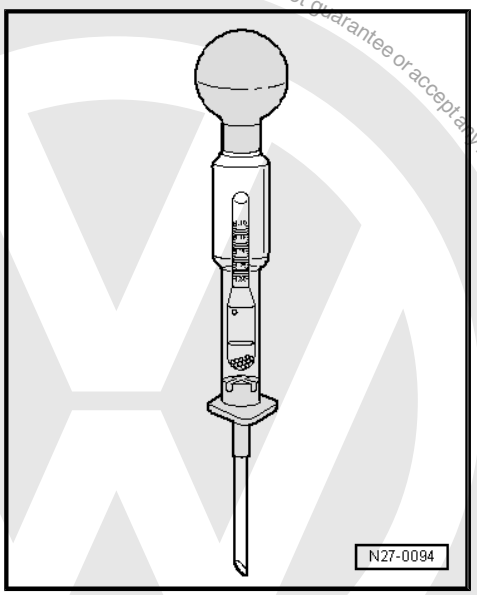

♦ Cleaning cloths

Protected by copyright. Copying for private or commercial purposes, in part or in whole, is not permitted unless authorised by Volkswagen AG. Volkswagen AG does not guarantee or accept any liability with respect to the correctness of information in this document. Copyright by Volkswagen AG.
satelettronica

WARNING

When handling battery acid, you must absolutely adhere to the accident prevention procedures.

Suitable protective clothing must be worn.

Use only an electric torch to illuminate the inside of the battery housing.

Never illuminate the inside of a battery housing with an open flame.

Never work with an open flame or burning cigarette in the vicinity of a battery.

Obey all regulations for the disposal of batteries and sulphuric acid when disposing of batteries.

The electrolyte specific gravity test and the battery load test provide information about the battery condition.

The electrolyte temperature must be at least 10 °C.

The specific gravity must be checked in all battery cells as follows:

– Switch off ignition.

– Remove all battery plugs (battery cell sealing plugs).

Protected by copyright. Copying for private or commercial purposes, in part or in whole, is not permitted unless authorised by Volkswagen AG. Volkswagen AG does not guarantee or accept any liability with respect to the correctness of information in this document. Copyright by Volkswagen AG.

satelettronica

– Immerse end of hydrometer in a cell and extract sufficient electrolyte so that float swims free in the electrolyte.

The denser the extracted electrolyte the higher the float swims.

The density in kg/dm^3 can be read off the scale of the hydrometer (specific gravity of electrolyte).

– Read off measured value on hydrometer and compare with table:

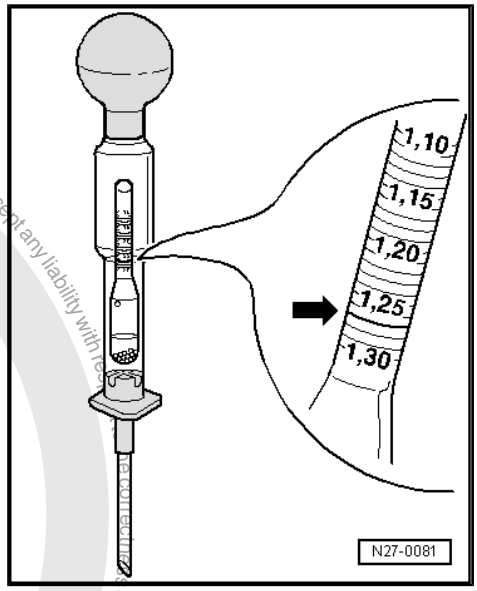

Charge condition in normal climatic zones	Specific densities in kg/dm^3
Discharged	1.15
Half charged	1.22
Well charged	1.28

The electrolyte density must be at least 1.24kg/dm^3.

– Charge battery if electrolyte density (specific gravity) is insufficient.

– Repeat electrolyte density (specific gravity) check after charging battery.

The measured value for the specific gravity of the individual battery cells must not differentiate from one another by more than 0.03 kg/dm^3.

Example of unacceptable deviations in specific gravity:

Battery cell:	1	2	3	4	5	6
	Specific gravity deviations in kg/dm^3 per cell					
Example 1:	1.24	1.25	1.25	1.10	1.24	1.25
Example 2:	1.26	1.26	1.25	1.14	1.18	1.24

Example 1:

The specific gravity in cell 4 is too low.

Example 2:

The specific gravity in cells 4 and 5 is too low. The the specific gravity figures between the battery cells is greater than 0.03 kg/dm^3.

– If the specifications are not obtained, renew battery.

– If the specifications are obtained, screw plugs in again.

It is essential to fit genuine battery sealing plugs in the battery openings to prevent battery leakage.

Always use genuine sealing plugs of the same type if lost or damaged.

The sealing plugs must be fitted with an O-ring.

– Use only genuine sealing plugs.

satelettronica

1.7 Battery load test

The specific gravity test on batteries with no magic eye or the colour of the magic eye and the discharge test give information about the condition of the battery.

Note

A battery load test should only be performed on a battery with a magic eye when the colour display is black. Or the vehicle, in which the battery is installed, has starting problems (hard to start).

Special tools and workshop equipment required

- Battery tester -VAS 1979- or battery tester -VAS 5033-

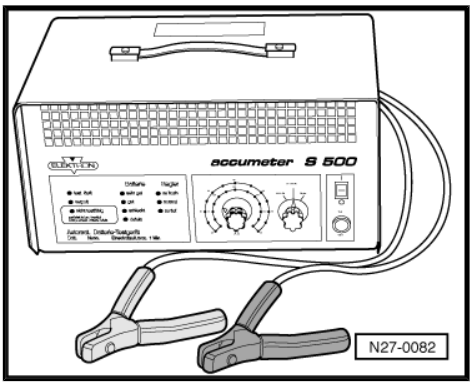

Note

There is no need to remove the battery when using battery tester -VAS 1979- or battery tester -VAS 5033- . Nor must the battery be disconnected.

1.7.1 Performing battery load test

– Switch off ignition.

– Read Operating Instructions for battery tester.

– Connect tester cable clamps to battery terminal as described in test unit instruction manual.

The clamps must have good contact with the battery terminals.

– The use of the battery tester is described in the Operating instructions for battery test unit.

Explanation of battery load test:

Because of the high load on the battery during this test (a high current flows) the battery voltage drops.

If the battery is OK, the voltage value drops only to the minimum voltage.

If the battery is defective or has a low charge, the battery voltage quickly drops below the minimum voltage.

After the test is completed, these low voltage values remain over a longer period, and the voltage increases very slowly again.

Copyright by Volkswagen AG. Volkswagen AG does not guarantee or accept any liability with respect to the correctness of information in this document. Copyright by Volkswagen AG. Protected by copyright. Copying for commercial purposes, in part or in whole, is not permitted unless authorised by Volkswagen AG.
satelettronica

1.8 Charging battery

WARNING

When handling battery acid, you must absolutely adhere to the accident prevention procedures.

Suitable protective clothing must be worn.

Use only an electric torch to illuminate the inside of the battery housing.

Never illuminate the inside of a battery housing with an open flame.

Never work with an open flame or burning cigarette in the vicinity of a battery.

Obey all regulations for the disposal of batteries and sulphuric acid when disposing of batteries.

Special tools and workshop equipment required

- Battery charging unit
- Batteries should be charged using a V.A.G battery charging unit e.g. -V.A.G 1471- , -V.A.G 1648- or -V.A.G 1974- .

Note

- *The battery must have a temperature of at least 10 °C.*
- *Batteries must not be charged quickly; quick-charging batteries damages them.*
- *If heavily discharged batteries are charged quickly they accept no charge current, or indicate fully charged too early due to the so-called "surface charging". Afterwards they appear to be OK but they are not.*

1.8.1 Performing battery charging

Note

Battery charging should only be performed with a V.A.G or VAS battery charging unit.

– Switch off battery charging unit.
– Switch off ignition.
– Connect battery charger positive cable to battery positive terminal.
– Connect battery charger negative cable to battery negative terminal.
– Set battery unit charge current according to battery capacity.
– Switch on battery charging unit.

Protected by copyright. Copying for private or commercial purposes, in part or in whole, is not permitted unless authorised by Volkswagen AG. Volkswagen AG does not guarantee or accept any liability with respect to the correctness of information in this document. Copyright by Volkswagen AG.

satelettronica

1.8.2 Procedures for totally discharged batteries

Note

Heavily discharged batteries can freeze in winter due to the high water content in the electrolyte. If a battery is frozen it must not be charged. The reason for this is because the housing becomes defective in a frozen state.

Remarks concerning totally discharged batteries:

Batteries that have not been used for a long time e.g. vehicles that have been stored, self-discharge.

On totally discharge batteries the electrolyte (sulphuric acid/water mixture) is almost all water, the sulphuric acid part is heavily reduced.

Totally discharged batteries sulphate, therefore all of the plate surfaces of the battery harden.

If a totally discharged battery is charged again shortly after it has lost its charge, the sulphation will dissipate.

If these batteries are not recharged, the plates continue to harden and the ability to recharge is reduced. The result of which is a reduction in the battery output.

Totally discharge batteries must be charged with a small charging current as follows:

– The charge current must be set at a maximum of 10 % of the battery capacity, therefore for a 60 Ah battery the charge current is a maximum 6 A (ampere)

Charge battery ⇒ page 30 .

The charge period must be at least 24 hours.

Totally discharged batteries must never be charged quickly.

1.9 Removing and installing battery

Special tools and workshop equipment required

♦ Torque wrench -V.A.G 1331-

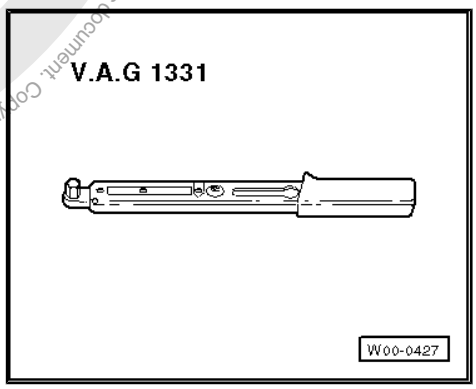

♦ 10 mm socket

1.9.1 Removing battery

– Switch off ignition.

– Disconnect battery earth strap on battery negative terminal first.

Protected by copyright. Copying for private or commercial purposes, in part or in whole, is not permitted unless authorised by Volkswagen AG. Volkswagen AG does not guarantee or accept any liability with respect to the correctness of information in this document. Copyright by Volkswagen AG.
satelettronica

– Before the battery can be removed, the fuse holder on the battery must be removed ⇒ page 32 .

– Then release the battery positive terminal clamp securing bolt -arrow-.

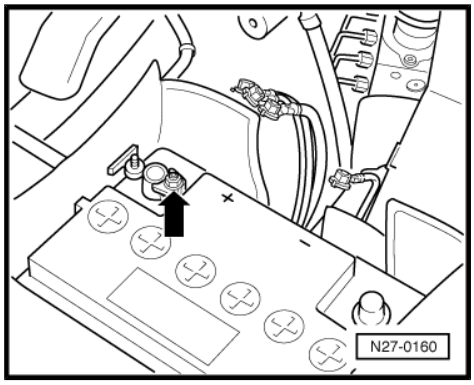

– The battery heat insulation jacket can only be opened and removed (if fitted) after first loosening the battery positive clamp and then removing the battery positive clamp from the terminal.

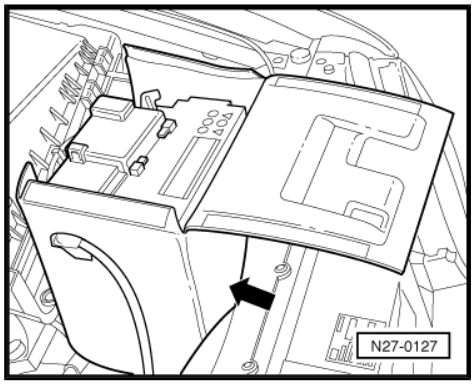

– Remove hexagon bolt M8×25 -arrow-.

– Remove battery clamping bracket.

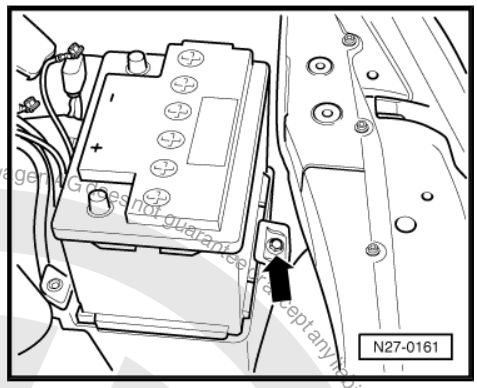

1.9.2 Removing and installing fuse holder on battery

– Switch off ignition.

– Disconnect battery earth strap on battery negative terminal first.

Protected by copyright. Copying for private or commercial purposes, in part or in whole, is not permitted unless authorised by Volkswagen AG. Volkswagen AG does not guarantee or accept any liability with respect to the correctness of information in this document. Copyright by Volkswagen AG.

satelettronica

Removing:

– Press locking lugs -arrows- together to open fuse holder and take off cover.

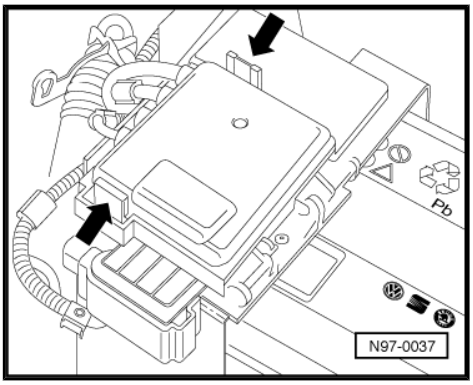

– Unscrew current conductor plate securing nut -1- on positive (+) terminal clamp.

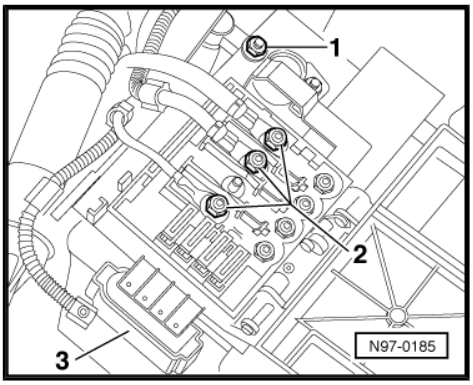

– Remove securing nuts -2- to disconnect wiring to strip fuses.

– Pull off connector -3-.

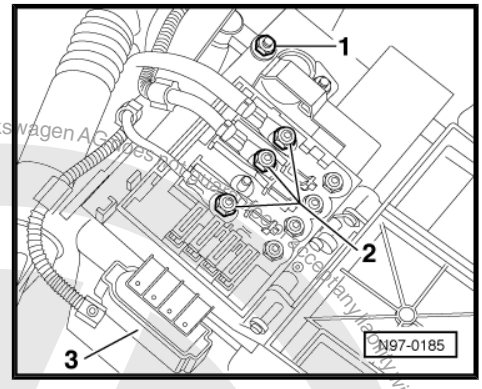

– Release tension on fuse holder spring catch by pressing down with a thumb and lever spring catch locking device off battery using a suitable screwdriver.

– Remove fuse holder upwards off battery.

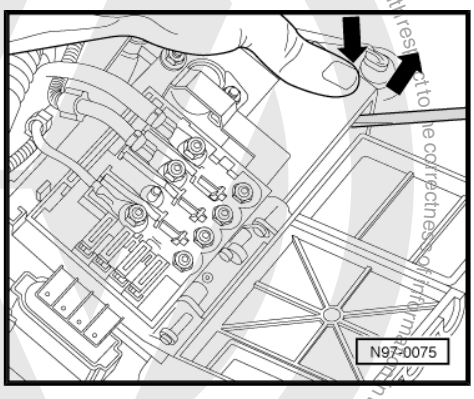

Installing:

Installation is carried out in the reverse sequence.

Protected by copyright. Copying for private or commercial purposes, in part or in whole, is not permitted unless authorised by Volkswagen AG. Volkswagen AG does not guarantee or assume any liability with respect to the correctness of information in this document. Copyright by Volkswagen AG.
satelettronica

1.9.3 Installing battery

Note

When the battery is reconnected, check the vehicle equipment (radio, clock, electrically operated windows) as per Workshop Manual and/or the Owner's Manual.

To guarantee the battery seats securely, only install batteries with a 10.5 mm battery foot strip and adhere to the following procedures:

– Install battery so that the lug of the battery carrier -arrow- engages in the battery base strip recess -1-.

It must not be possible to move a battery to the left or to the right.

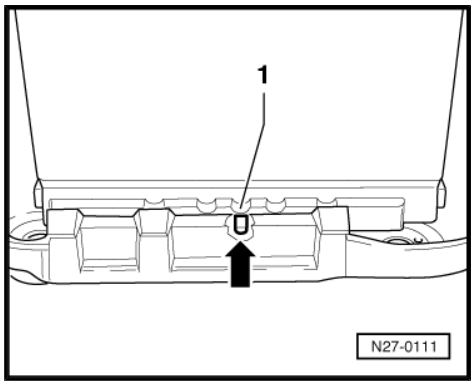

The battery is inserted correctly when the centre cut-out in the battery foot strip aligns with threaded hole in the battery carrier -arrows-.

– On batteries with a hose for central venting ensure that the hose is not pinched. Only then can the battery vent freely.

– Ensure that the opening on the upper side of the battery cover is not blocked on batteries without a hose for central venting.

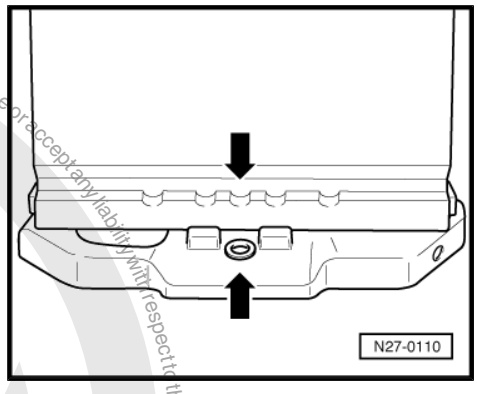

– Install retaining bracket and tighten M8×25 securing bolt -arrow- to 22 Nm.

– If removed reinstall the heat insulation jacket.

– Fit positive cable clamp onto battery positive terminal.

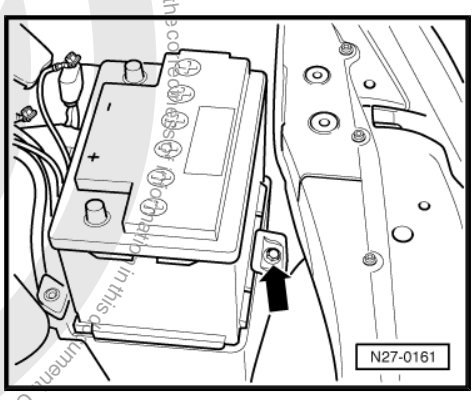

Note

- *Battery terminal clamps must be fitted only by hand without force to prevent damage to battery housing.*
- *Battery terminals must not be greased.*

Protected by copyright. Copying for private or commercial purposes, in part or in whole, is not permitted unless authorised by Volkswagen AG. Volkswagen AG does not guarantee or accept any liability with respect to the correctness of information in this document. Copyright by Volkswagen AG.
satelettronica

– Tighten battery positive terminal clamp securing bolt -arrow- to 6 Nm.

– Fit fuse holder onto battery, when doing this fit current conductor plate onto securing pins on battery positive terminal.

– Engage fuse holder spring catch in battery.

– Tighten securing bolt to 6 Nm.

– Close heat insulation jacket if necessary.

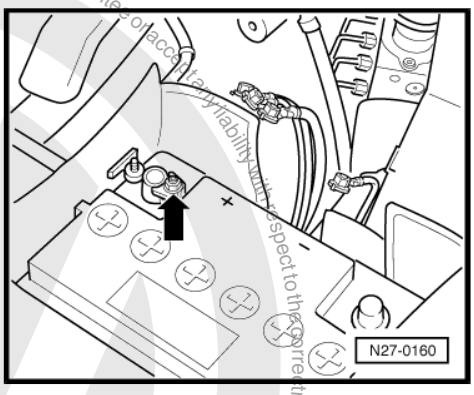

– Tighten current conductor plate securing nut -1- on positive (+) terminal clamp.

– Reconnect wiring/cables to strip fuses again if they have been disconnected and tighten securing bolts -2-.

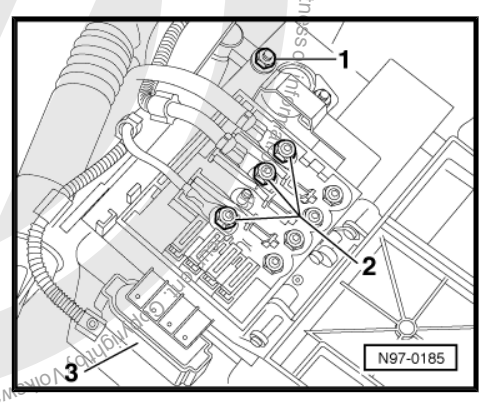

Note

See connecting plan in appropriate current flow diagram . ⇒ Current flow diagrams, Electrical fault finding and Fitting locations

– Reconnect connector -3-.

– Fit fuse holder cover and close.

– After installing, check that battery is seated securely. A loosely fitted battery creates the following dangers:

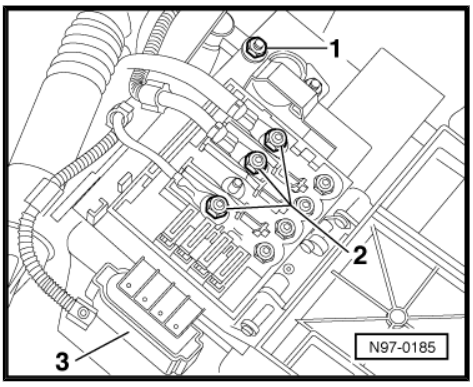

- Shortened service life due to damage from vibration.
- The plates in the battery cells will be damaged if the battery is not secured correctly.
- Damage to battery housing by clamping bracket (possibility of acid leaking, with high consequential costs).
- Poor crash safety.

1.10 Explanation of central gas venting

Note

- *The latest generation of batteries is equipped with a central gas venting system and a “fine metal mesh”.*
- *The flame trap comprises a small round fibreglass mat, about 15 mm in diameter and 2 mm thick. It has an effect similar to a valve, and thus allows the gases produced in the battery to vent.*
- *The gasses that form whilst charging can vent centrally through an opening on the upper side of the cover. The anti-flash protection is also fitted at this point which prevents ignition of the flammable gasses in the battery.*

Protected by copyright. Copyright by Volkswagen AG.
AG, Volkswagen AG does not guarantee or accept any liability with respect to the correctness of information.
Copy for private or commercial purposes, in part or in whole, is not permitted unless authorised by Volkswagen AG.
satelettronica

There are two types of batteries with central gas vents:

Note

- *Batteries with a hose on central gas vent*
- *Batteries with no hose on central gas vent*

It is essential to fit genuine battery sealing plugs in the battery openings to prevent battery leakage.

Always use genuine sealing plugs of the same type if lost or damaged.

The sealing plugs must be fitted with an O-ring.

satelettronica

Protected by copyright. Copying for private or commercial purposes, in part or in whole, is not permitted unless authorised by Volkswagen AG. Volkswagen AG does not guarantee or accept any liability with respect to the correctness of information in this document. Copyright by Volkswagen AG.

2 Starter

WARNING

Before working on the electrical system disconnect the battery earth strap.

Note

- *If vehicle has a security-coded radio, obtain anti-theft code before disconnecting battery.*
- *Check vehicle equipment (radio, clock and convenience electrics etc.) according to Workshop Manual and/or Owner's Manual when the battery has been disconnected and then reconnected.*
- *Notes concerning the removal and installation of the starter bush can also be found in ⇒ 5-speed manual gearbox 085; Rep. Gr. 34 .*

2.1 Removing and installing starter (1.4 l petrol engine)

Special tools and workshop equipment required

- Torque wrench -V.A.G 1331-

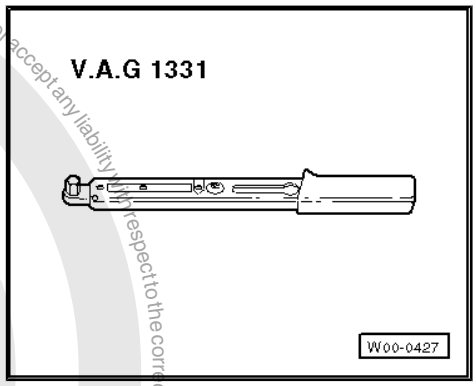

- Torque wrench -V.A.G 1332-

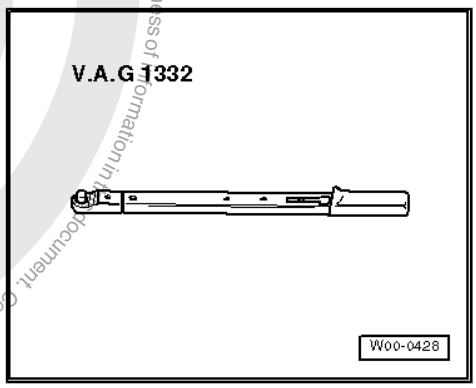

Protected by copyright. Copying for private or commercial purposes, in part or in whole, is not permitted unless authorised by Volkswagen AG. Volkswagen AG does not guarantee or accept any liability with respect to the correctness of information in this document. Copyright by Volkswagen AG.

satelettronica

Removing:

– Disconnect earth strap at battery.

– Release terminal 50 connector -1- and pull off.

– Remove plastic cap -2- and disconnect wire from solenoid switch terminal 30.

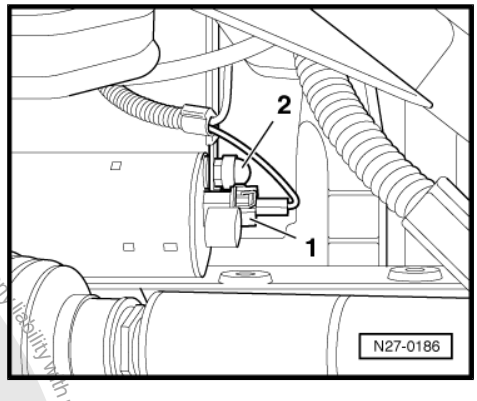

– Remove hexagon bolt -1-.

– Remove hexagon nut -4-.

– Unscrew hexagon bolt -3- and remove bolt -2-.

– Take starter out downwards.

Installing:

– Insert starter.

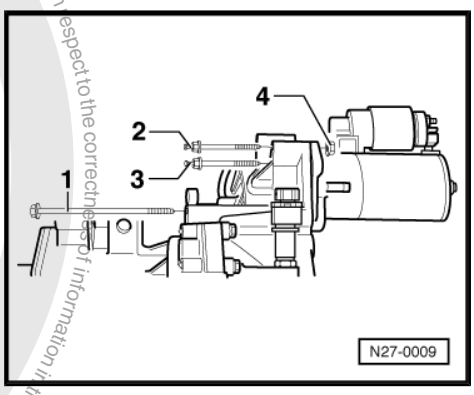

– Insert hexagon bolts -1- and -3- and tighten hand-tight.

– Insert hexagon bolt -2- and tighten hexagon nut -4- hand-tight.

– Tighten hexagon bolts -1- and -2- and hexagon nut -4-.

Prescribed torques: hexagon bolt -1-: 45 Nm, hexagon bolt -3-: 60 Nm, hexagon bolt -4-: 60 Nm.

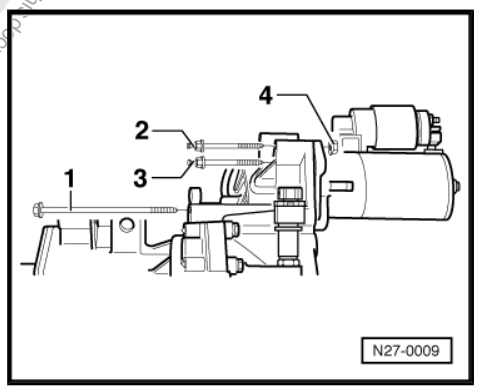

– Reconnect terminal 50 connector -1-.

– Tighten wire terminal from solenoid (terminal 30) to 13 Nm and fit plastic cap -2-.

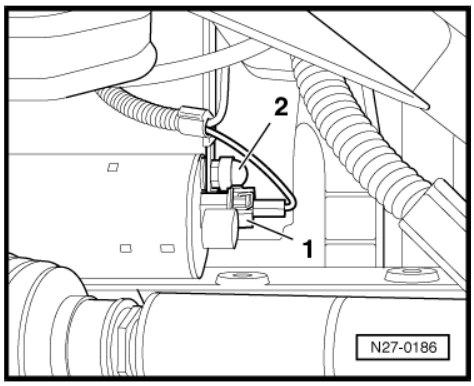

2.2 Removing and installing starter (1.6 l, 1.8 l petrol engines and diesel engines)

Special tools and workshop equipment required

Protected by copyright. Copyright by Volkswagen AG. Volkswagen AG does not guarantee or accept any liability with respect to the correctness of information in this document. Copyright by Volkswagen AG. is not permitted unless authorised by Volkswagen AG. Volkswagen AG does not guarantee or accept any liability with respect to the correctness of information in this document. Copyright by Volkswagen AG. Protected by copyright. Copyright by Volkswagen AG. is not permitted unless authorised by Volkswagen AG. Volkswagen AG does not guarantee or accept any liability with respect to the correctness of information in this document. Copyright by Volkswagen AG. Protected by copyright. Copyright by Volkswagen AG. is not permitted unless authorised by Volkswagen AG. Volkswagen AG does not guarantee or accept any liability with respect to the correctness of information in this document. Copyright by Volkswagen AG.

satelettronica

- Torque wrench -V.A.G 1331-

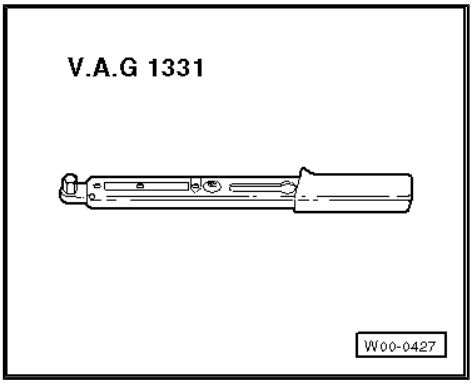

- Torque wrench -V.A.G 1332-

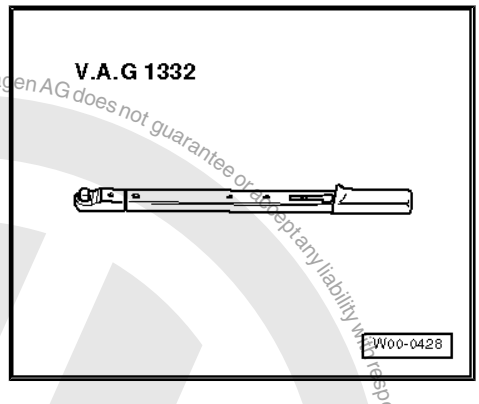

Protected by copyright. Copying for private or commercial purposes, in part or in whole, is not permitted unless authorised by Volkswagen AG. Volkswagen AG does not guarantee or accept any liability with respect to the correctness of information in this document. Copyright by Volkswagen AG.

satelettronica

Removing:

– Disconnect earth strap at battery.

Note

Before removing the starter on TDI engines, the cables/hoses must be removed from charge air cooler to intake manifold, to turbocharger and from radiator to cylinder head.

– Remove noise insulation tray ⇒ General body repairs, exterior; Rep. Gr. 50 ; Body - front; Assembly overview .
– Disconnect connector -1- and pull out of retainer.
– Release terminal 50 connector -2- and pull off.
– Remove terminal 30 wire -3- on solenoid. When installing, tighten nut to 13 Nm.
– Remove wiring from wiring guides.
– Remove wiring guides.

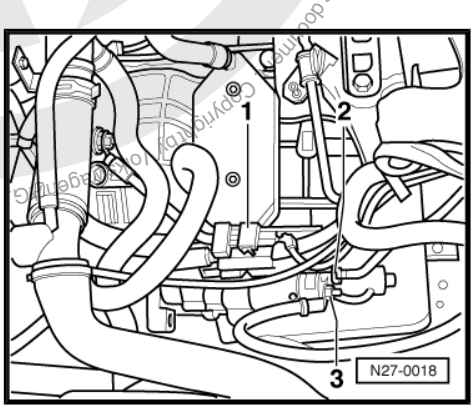

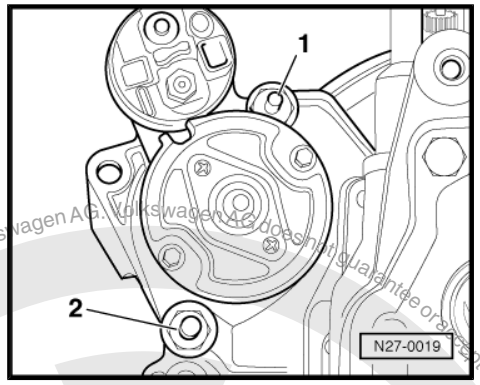

– Remove upper M12×180 mm hexagon bolt -1-. When installing, tighten hexagon bolt to 65 Nm.
– Remove lower M12×180 mm hexagon bolt -2-. When installing, tighten hexagon bolt to 65 Nm.
– Take starter out downwards.

Installing:

Install in reverse order of removal, observe specified torque settings .

Protected by copyright. Copying for private or commercial purposes, in part or in whole, is not permitted unless authorised by Volkswagen AG. Volkswagen AG does not guarantee or accept any liability with respect to the correctness of information in this document. Copyright by Volkswagen AG.
satelettronica

3 Alternator

Note

- *Checking alternator: ⇒ Current flow diagrams, Electrical fault finding and Fitting locations.*
- *When the battery is reconnected, check the vehicle equipment (radio, clock, electrically operated windows) as per Workshop Manual and/or the Owner's Manual.*

WARNING

Before working on the electrical system disconnect the battery earth strap.

Special tools and workshop equipment required

- Torque wrench -V.A.G 1331-

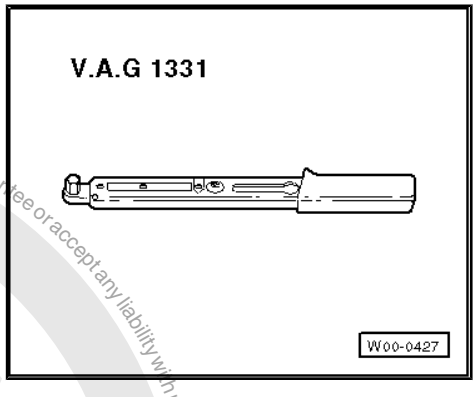

3.1 Assembly overview

3.1.1 4-cylinder 1.4 l fuel injection engine with basic belt drive, vehicles ▸ 04.99

Protected by copyright. Copying for private or commercial purposes, in part or in whole, is not permitted unless authorised by Volkswagen AG. Volkswagen AG does not guarantee or accept any liability with respect to the correctness of information in this document. Copyright by Volkswagen AG.
satelettronica

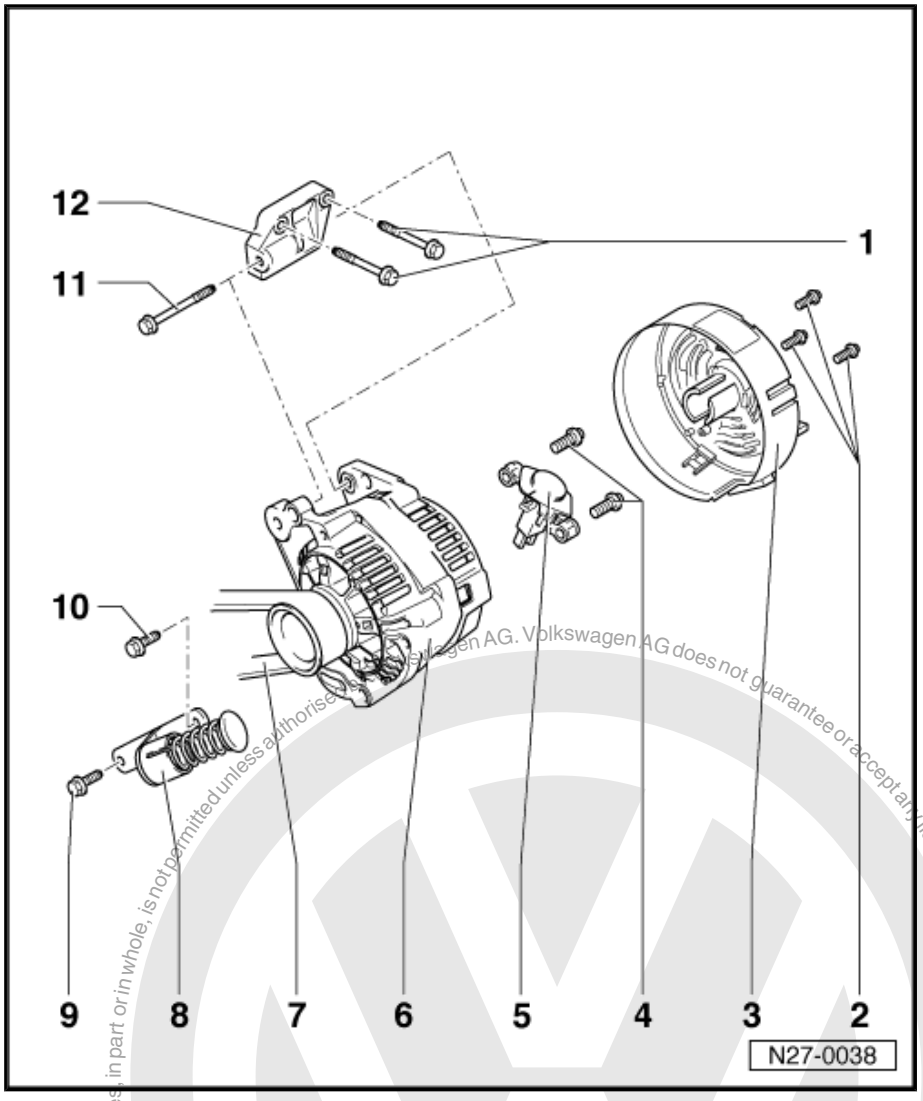

1 - Hexagon bolts
- ❑ 55 Nm
- ❑ With aluminium block: M10×55 mm, renew bolts (coated with sealant)
- ❑ With cast iron block: M10×50 mm

2 - Hexagon bolts
- ❑ M3×18mm

3 - Protective cap

4 - Cross-head screws
- ❑ M4×25 mm

5 - Voltage regulator
- ❑ Checking carbon brushes ⇒ page 58
- ❑ Removing and installing ⇒ page 59

6 - Alternator
- ❑ Tightening torque of B+ wire ⇒ page 58 .

7 - Poly-V-belt
- ❑ Removing and installing ⇒ page 53
- ❑ Poly-V-belt drive ⇒ page 51

8 - Tensioning arm
- ❑ Observe tightening sequence ⇒ page 53

9 - Hexagon bolt
- ❑ 25 Nm
- ❑ With aluminium block: M8×25 mm, renew bolt (coated with sealant)
- ❑ With cast iron block: M8×22 mm

10 - Hexagon bolt
- ❑ M8×35 mm
- ❑ 25 Nm

11 - Hexagon bolt
- ❑ M8×85 mm
- ❑ 25 Nm
- ❑ Observe tightening sequence ⇒ page 53

12 - Bracket

Protected by copyright. Copying for private or commercial purposes, in part or in whole, is not permitted unless authorised by Volkswagen AG. Volkswagen AG does not guarantee or accept any liability with respect to the correctness of information in this document. Copyright by Volkswagen AG.
satelettronica

3.1.2 4-cylinder 1.4 l fuel injection engine with basic belt drive, vehicles 05.99 ▸

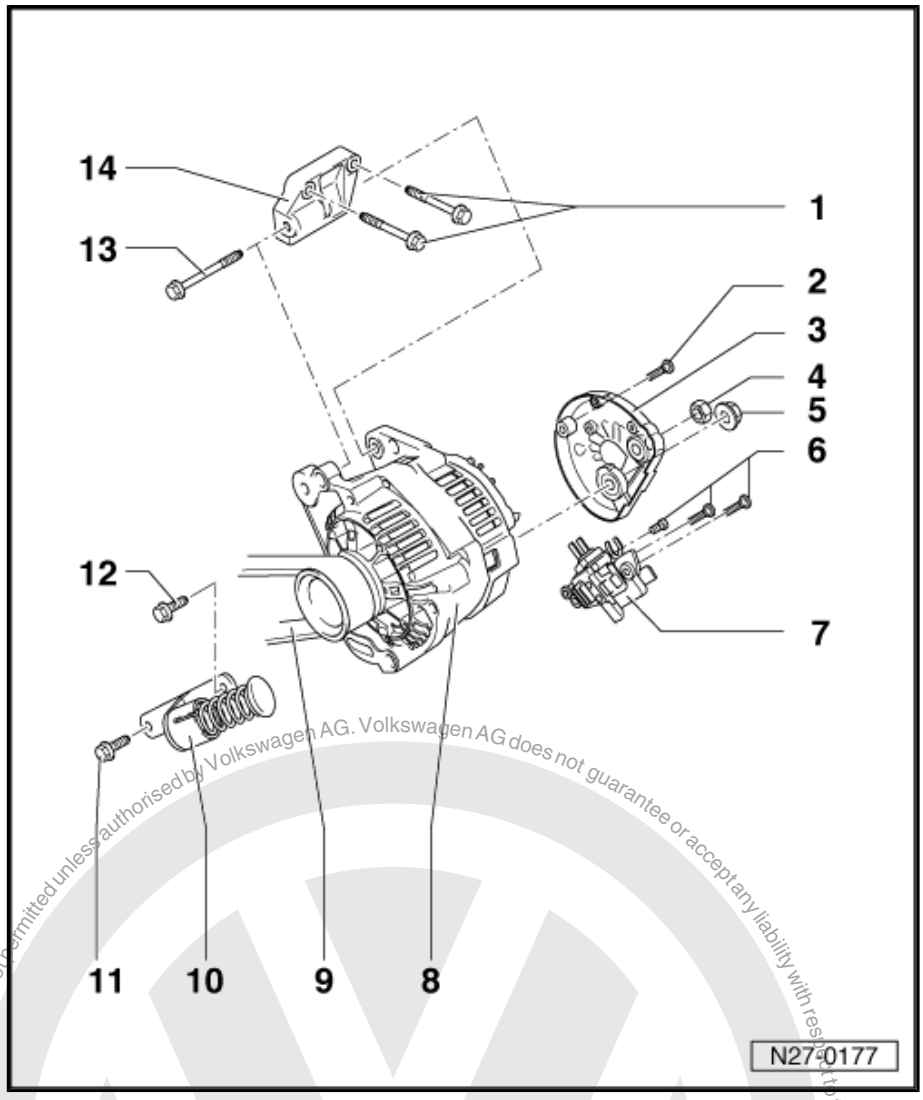

1 - Hexagon bolts
- ❑ M10×50 mm
- ❑ 45 Nm
- ❑ With aluminium block: renew bolts (coated with sealant)

2 - Cross-head screw

3 - Protective cap

4 - Hexagon nut
- ❑ M8

5 - Hexagon nut
- ❑ M8

6 - Cross-head screws

7 - Voltage regulator
- ❑ Checking carbon brushes ⇒ page 60
- ❑ Removing and installing ⇒ page 60

8 - Alternator
- ❑ Tightening torque of B+ wire ⇒ page 59 .

9 - Poly-V-belt
- ❑ Removing and installing ⇒ page 53
- ❑ Poly-V-belt drive ⇒ page 51

10 - Tensioning arm
- ❑ Observe tightening sequence ⇒ page 53

11 - Hexagon bolt
- ❑ M8×22 mm
- ❑ 25 Nm
- ❑ With aluminium block: renew bolt (coated with sealant)

12 - Hexagon bolt
- ❑ M8×39 mm
- ❑ 25 Nm

13 - Hexagon bolt
- ❑ M8×85 mm
- ❑ 25 Nm
- ❑ Observe tightening sequence ⇒ page 53

14 - Bracket

Protected by copyright. Copying for private or commercial purposes, in part or in whole, is not permitted unless authorised by Volkswagen AG. Volkswagen AG does not guarantee or accept any liability with respect to the correctness of information in this document. Copyright by Volkswagen AG.
satelettronica

3.1.3 4-cylinder 1.4 l fuel injection engine with power assisted steering, vehicles ▸ 04.99

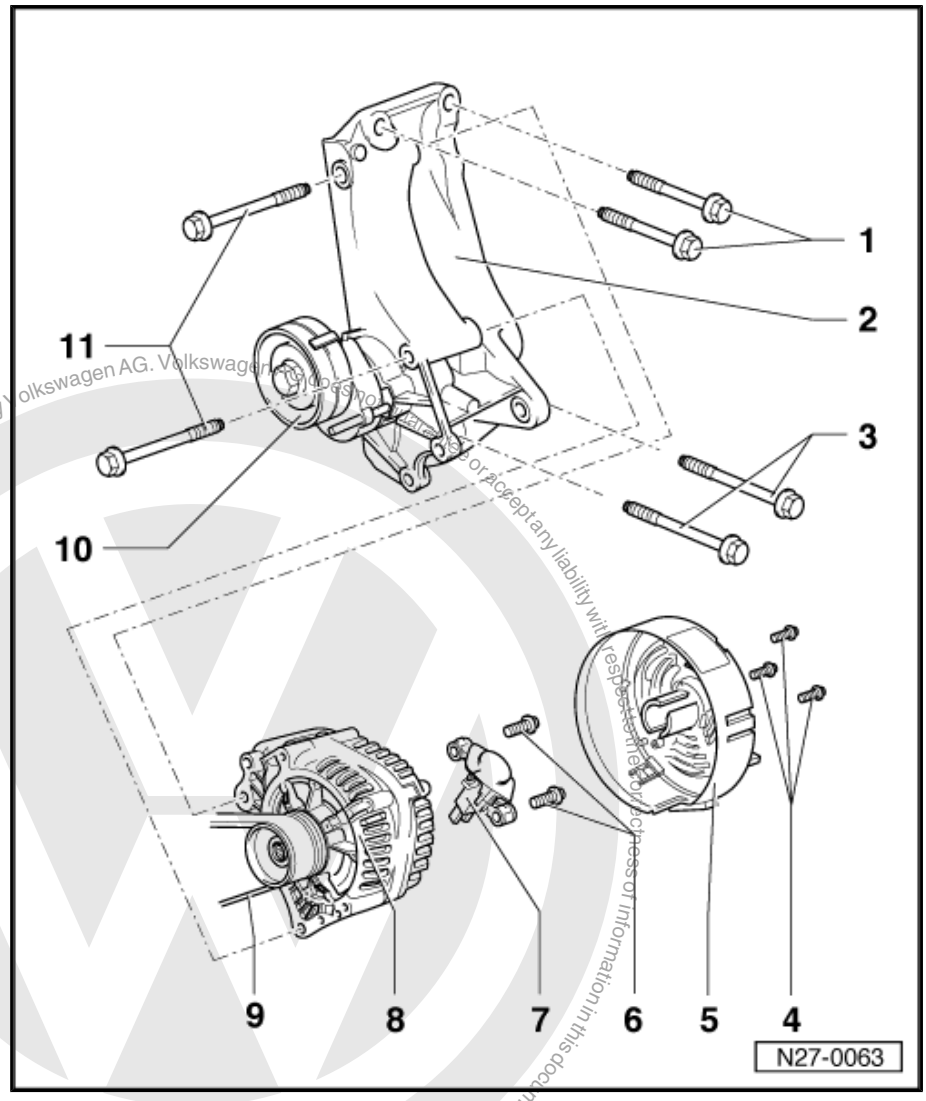

1 - Hexagon bolts
- ❑ 55 Nm
- ❑ With aluminium block: M10×55 mm, renew bolts (coated with sealant)
- ❑ With cast iron block: M10×50 mm
- ❑ Tightening sequence: Upper right bolt first (item 1), then lower right bolt (item 3), and then upper and lower bolts on left (as seen looking forwards)

2 - Bracket

3 - Hexagon bolts
- ❑ With aluminium block: M10×100 mm, renew bolts (coated with sealant)
- ❑ With cast iron block: M10×95 mm
- ❑ Tightening sequence: Upper right bolt first (item 1), then lower right bolt (item 3), and then upper and lower bolts on left (as seen looking forwards)

4 - Hexagon bolts
- ❑ M3×18mm

5 - Protective cap

6 - Cross-head screws
- ❑ M4×25 mm

7 - Voltage regulator
- ❑ Checking carbon brushes ⇒ page 58
- ❑ Removing and installing ⇒ page 59

8 - Alternator
- ❑ Tightening torque of B+ wire ⇒ page 58 .

9 - Poly-V-belt
- ❑ Removing and installing ⇒ page 55
- ❑ Poly-V-belt drive ⇒ page 52

10 - Tensioning roller

11 - Hexagon bolts
- ❑ M8×85 mm
- ❑ 25 Nm

satelettronica

3.1.4 4-cylinder 1.4 l fuel injection engine with power assisted steering, vehicles 05.99 ▸

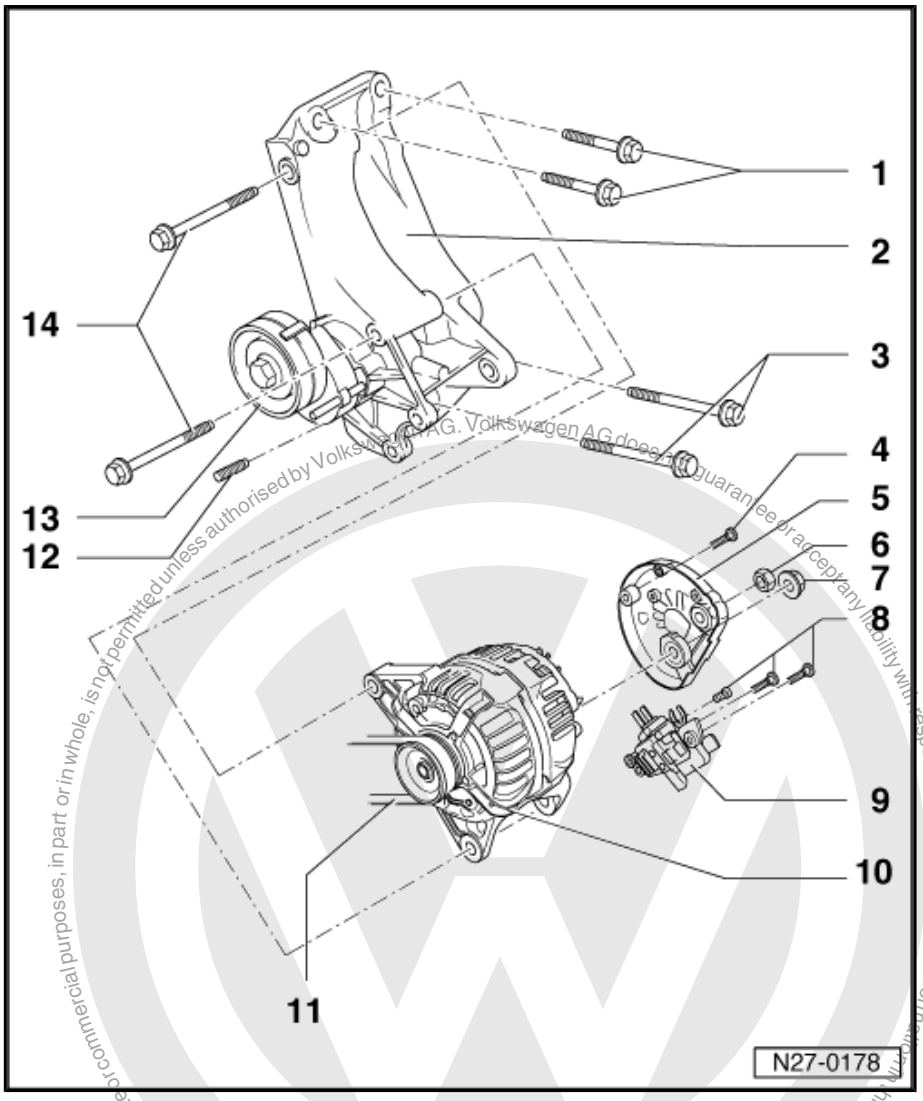

1 - Hexagon bolts
- ❑ M10×55 mm
- ❑ 50 Nm
- ❑ With aluminium block: renew bolts (coated with sealant)
- ❑ Tightening sequence: Upper right bolt first (item 1), then lower right bolt (item 3), and then upper and lower bolts on left (as seen looking forwards)

2 - Bracket

3 - Hexagon bolts
- ❑ M10×100 mm
- ❑ 50 Nm
- ❑ With aluminium block: renew bolts (coated with sealant)
- ❑ Tightening sequence: Upper right bolt first (item 1), then lower right bolt (item 3), and then upper and lower bolts on left (as seen looking forwards)

4 - Cross-head screw

5 - Protective cap

6 - Hexagon nut
- ❑ M8

7 - Hexagon nut
- ❑ M8

8 - Cross-head screws

9 - Voltage regulator
- ❑ Checking carbon brushes ⇒ page 60
- ❑ Removing and installing ⇒ page 60

10 - Alternator
- ❑ Tightening torque of B+ wire ⇒ page 59 .

11 - Poly-V-belt
- ❑ Removing and installing ⇒ page 55
- ❑ Poly-V-belt drive ⇒ page 52

12 - M8 sealing screw with hexagon socket head

13 - Tensioning roller

14 - Hexagon bolts
- ❑ M8×85 mm
- ❑ 25 Nm

Protected by copyright. Copying for private or commercial purposes, in part or in whole, is not permitted unless authorised by Volkswagen AG. Volkswagen AG does not guarantee or accept any liability with respect to the correctness of information in this document. Copyright by Volkswagen AG.
satelettronica

3.1.5 4-cylinder 1.4 l fuel injection engine with air conditioning compressor and power assisted steering, vehicles ▸ 04.99

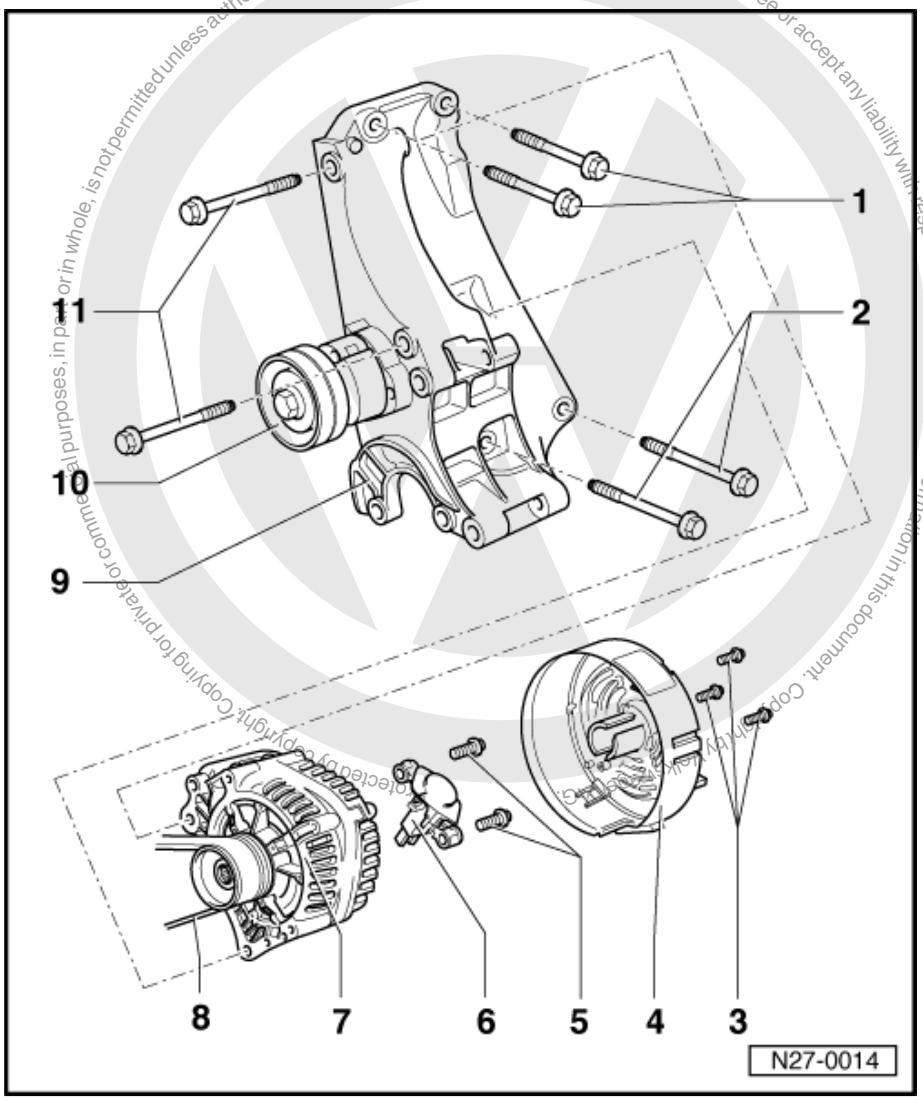

1 - Hexagon bolts
- ❑ 55 Nm
- ❑ With aluminium block: M10×55 mm, renew bolts (coated with sealant)
- ❑ With cast iron block: M10×50 mm
- ❑ Tightening sequence: Upper right bolt first (item 1), then lower right bolt (item 2), and then upper and lower bolts on left (as seen looking forwards)

2 - Hexagon bolts
- ❑ With aluminium block: M10×100 mm, renew bolts (coated with sealant)
- ❑ With cast iron block: M10×95 mm
- ❑ Tightening sequence: Upper right bolt first (item 1), then lower right bolt (item 2), and then upper and lower bolts on left (as seen looking forwards)

3 - Hexagon bolts
- ❑ M3×18mm

4 - Protective cap

5 - Cross-head screws
- ❑ M4×25 mm

6 - Voltage regulator
- ❑ Checking carbon brushes ⇒ page 58
- ❑ Removing and installing ⇒ page 59

7 - Alternator
- ❑ Tightening torque of B+ wire ⇒ page 58 .

8 - Poly-V-belt
- ❑ Removing and installing ⇒ page 55
- ❑ Poly-V-belt drive ⇒ page 52

9 - Bracket

10 - Tensioning roller

11 - Hexagon bolts
- ❑ M8×85 mm
- ❑ 25 Nm

Volkswagen AG. Volkswagen AG does not guarantee or accept any liability with respect to the correctness of information in this document. Copyright by Volkswagen AG.
Electronic copy for private or commercial purposes, in part or in whole, is not permitted unless authorised by Volkswagen AG. Copyright by Volkswagen AG.
satelettronica

3.1.6 4-cylinder 1.4 l fuel injection engine with air conditioning compressor and power assisted steering, vehicles 05.99 ▸

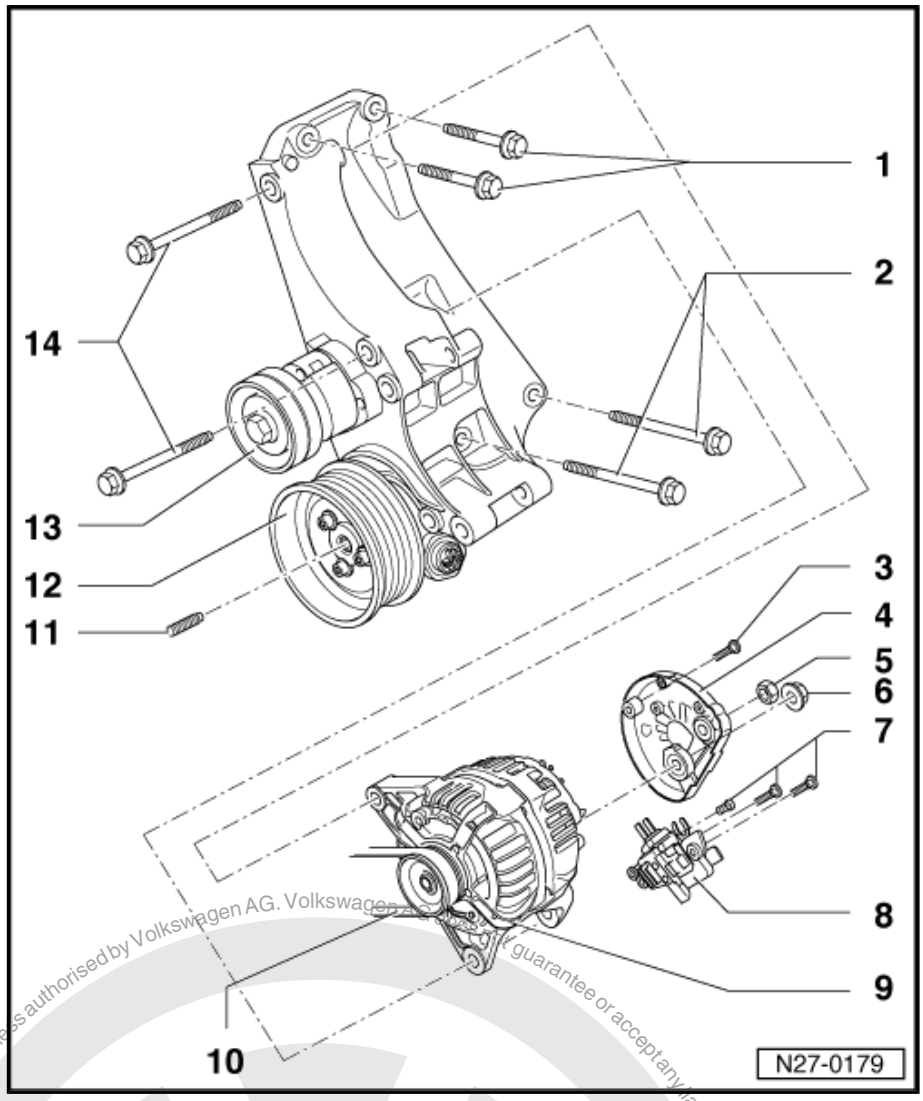

1 - Hexagon bolts
- ❑ M10×50 mm
- ❑ 45 Nm
- ❑ With aluminium block: renew bolts (coated with sealant)
- ❑ Tightening sequence: Upper right bolt first (item 1), then lower right bolt (item 2), and then upper and lower bolts on left (as seen looking forwards)

2 - Hexagon bolts
- ❑ M10×95 mm
- ❑ 45 Nm
- ❑ With aluminium block: renew bolts (coated with sealant)
- ❑ Tightening sequence: Upper right bolt first (item 1), then lower right bolt (item 2), and then upper and lower bolts on left (as seen looking forwards)

3 - Cross-head screw

4 - Protective cap

5 - Hexagon nut
- ❑ M8

6 - Hexagon nut
- ❑ M8

7 - Cross-head screws

8 - Voltage regulator
- ❑ Checking carbon brushes ⇒ page 60
- ❑ Removing and installing ⇒ page 60

9 - Alternator
- ❑ Tightening torque of B+ wire ⇒ page 59 .

10 - Poly-V-belt
- ❑ Removing and installing ⇒ page 55
- ❑ Poly-V-belt drive ⇒ page 52

11 - M8 sealing screw with hexagon socket head

12 - Bracket

13 - Tensioning roller

14 - Hexagon bolts
- ❑ M8×85 mm
- ❑ 25 Nm

satelettronica
Protected by copyright. Copying for private or commercial purposes, in part or in whole, is not permitted unless authorised by Volkswagen AG. Volkswagen AG does not guarantee or accept any liability with respect to the correctness of information in this document. Copyright by Volkswagen AG.

3.1.7 4-cylinder 1.6 l and 1.8 l fuel injection engines, vehicles ▸ 04.99

1 - Bracket

2 - Tensioning element for tensioning roller

3 - Hexagon nuts
- ❑ M8
- ❑ 30 Nm

4 - Alternator
- ❑ Tightening torque of B+ wire ⇒ page 58 .

5 - Voltage regulator
- ❑ Checking carbon brushes ⇒ page 58
- ❑ Removing and installing ⇒ page 59

6 - Cross-head screws
- ❑ M4×25 mm

7 - Protective cap

8 - Cross-head screws

9 - Poly-V-belt
- ❑ Removing and installing ⇒ page 56
- ❑ Poly-V-belt drive ⇒ page 52

10 - Hexagon bolts
- ❑ M8×85 mm
- ❑ 25 Nm

11 - Tensioning roller

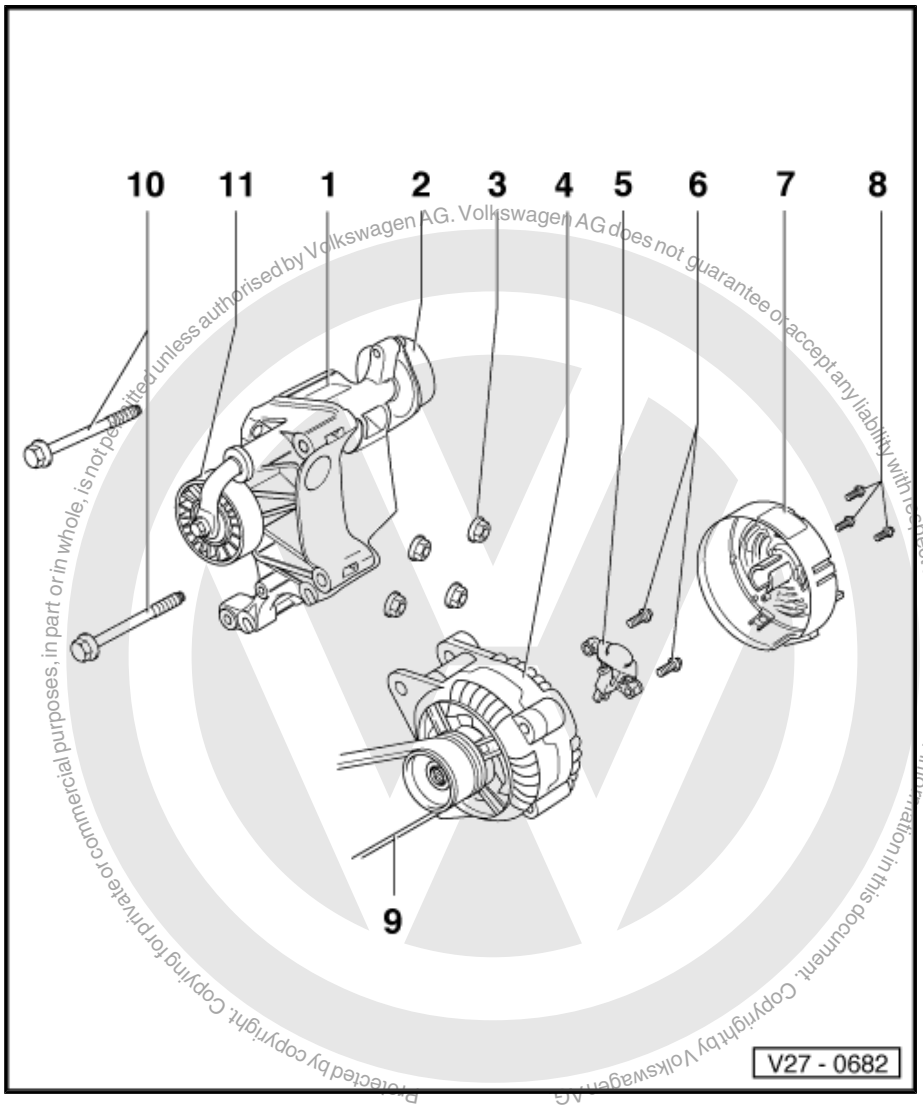

satelettronica

3.1.8 4-cylinder 1.6 l and 1.8 l fuel injection engines, vehicles 05.99 ▸

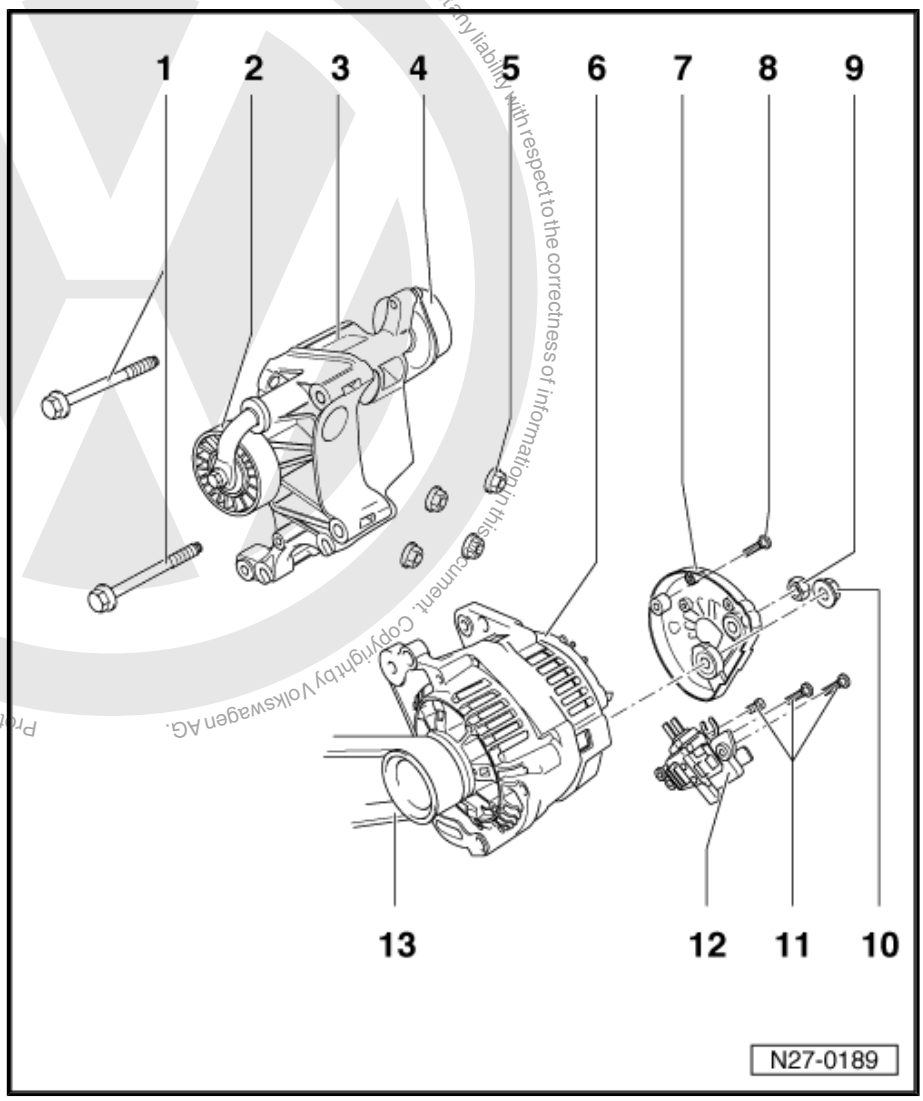

1 - Hexagon bolts
- ❑ M8×85 mm
- ❑ 25 Nm

2 - Tensioning roller

3 - Bracket

4 - Tensioning element for tensioning roller

5 - Hexagon nuts
- ❑ M8
- ❑ 30 Nm

6 - Alternator
- ❑ Tightening torque of B+ wire ⇒ page 59 .

7 - Protective cap

8 - Cross-head screw

9 - Hexagon nut
- ❑ M8

10 - Hexagon nut
- ❑ M8

11 - Cross-head screws

12 - Voltage regulator
- ❑ Checking carbon brushes ⇒ page 60
- ❑ Removing and installing ⇒ page 60

13 - Poly-V-belt
- ❑ Removing and installing ⇒ page 56
- ❑ Poly-V-belt drive ⇒ page 52

satelettronica

3.1.9 Diesel engine vehicles ▸ 04.99

1 - Bracket

2 - Tensioning element for tensioning roller

3 - Hexagon nuts
- ❑ M8
- ❑ 30 Nm

4 - Alternator
- ❑ Tightening torque of B+ wire ⇒ page 58 .

5 - Voltage regulator
- ❑ Checking carbon brushes ⇒ page 58
- ❑ Removing and installing ⇒ page 59

6 - Cross-head screws
- ❑ M4×25 mm

7 - Protective cap

8 - Cross-head screws

9 - Poly-V-belt
- ❑ Removing and installing ⇒ page 56
- ❑ Poly-V-belt drive ⇒ page 52

10 - Internally threaded sleeve
- ❑ M8

11 - Tensioning roller

12 - Hexagon bolt
- ❑ M8×85 mm
- ❑ 25 Nm

13 - Hexagon bolt
- ❑ 25 Nm

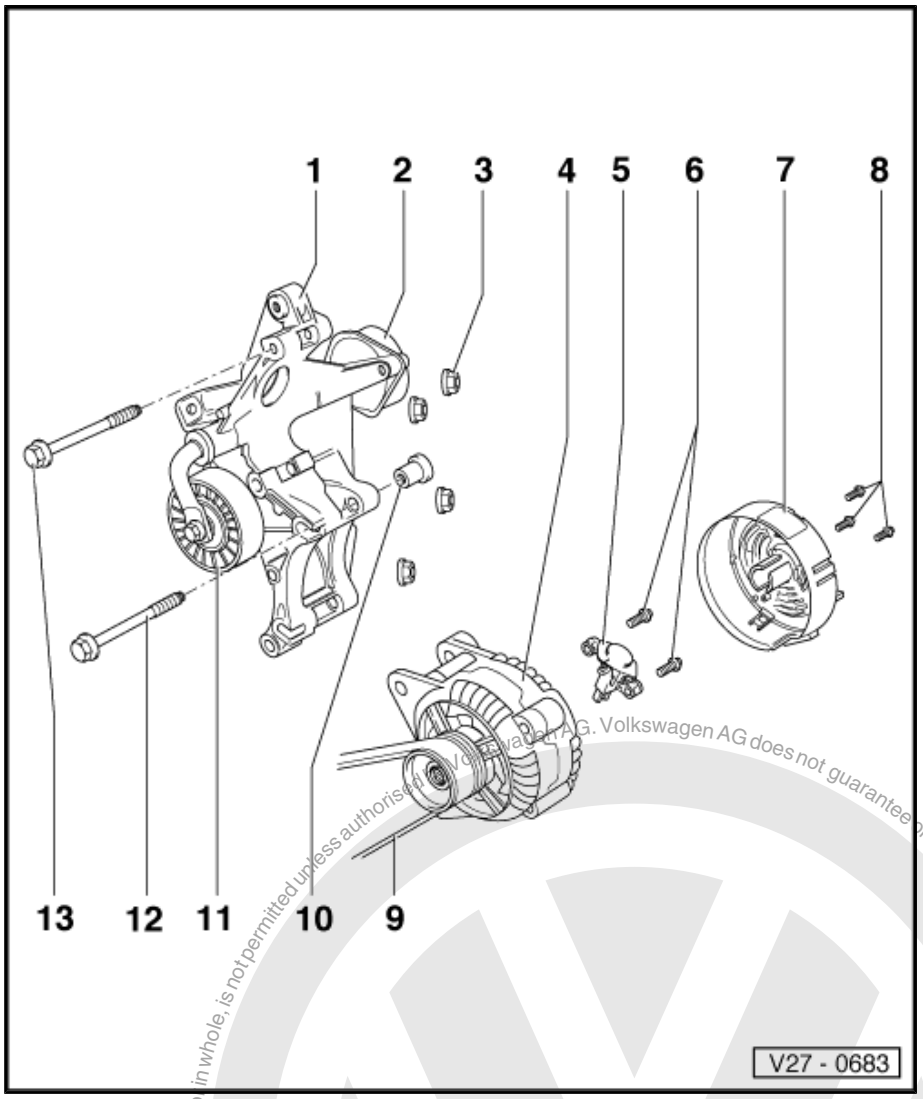

Protected by copyright. Copying for private or commercial purposes, in part or in whole, is not permitted unless authorised by Volkswagen AG. Volkswagen AG does not guarantee or accept any liability with respect to the correctness of information in this document. Copyright by Volkswagen AG.
satelettronica

3.1.10 Diesel engine vehicles 05.99 ▸

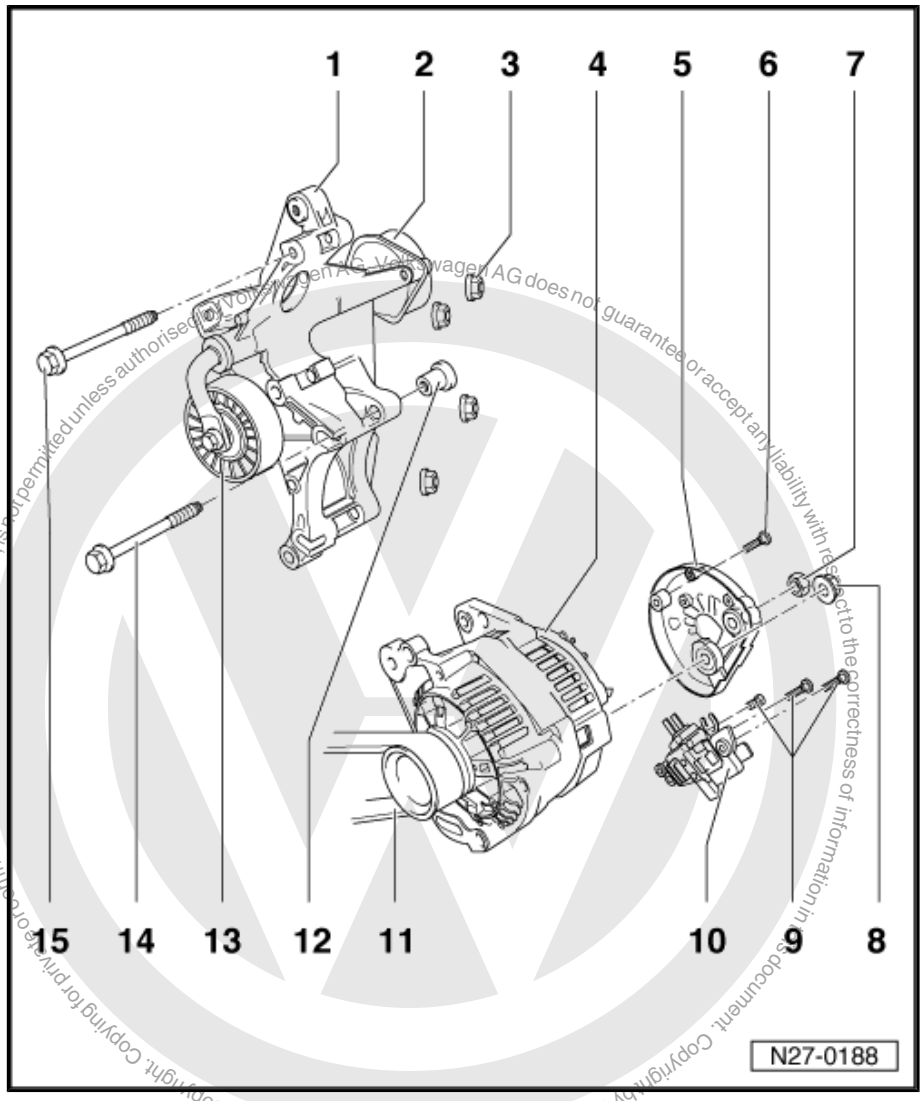

1 - Bracket

2 - Tensioning element for tensioning roller

3 - Hexagon nuts
- ❑ M8
- ❑ 30 Nm

4 - Alternator
- ❑ Tightening torque of B+ wire ⇒ page 59 .

5 - Protective cap

6 - Cross-head screw

7 - Hexagon nut
- ❑ M8

8 - Hexagon nut
- ❑ M8

9 - Cross-head screws

10 - Voltage regulator
- ❑ Checking carbon brushes ⇒ page 60
- ❑ Removing and installing ⇒ page 60

11 - Poly-V-belt
- ❑ Removing and installing ⇒ page 56
- ❑ Poly-V-belt drive ⇒ page 52

12 - Internally threaded sleeve
- ❑ M8

13 - Tensioning roller

14 - Hexagon bolt
- ❑ M8×85 mm
- ❑ 25 Nm

15 - Hexagon bolt
- ❑ 25 Nm

Protected by copyright. Copying for private or commercial purposes, in part or in whole, is not permitted unless authorised by Volkswagen AG. Volkswagen AG does not guarantee or accept any liability with respect to the correctness of information in this document. Copyright by Volkswagen AG.

satelettronica

3.2 Poly-V-belt drives

4-cylinder 1.4 l fuel injection engine with basic belt drive

1 - Crankshaft/vibration damper/belt pulley

2 - Poly-V-belt - crankshaft/vibration damper and alternator

3 - Belt pulley - alternator

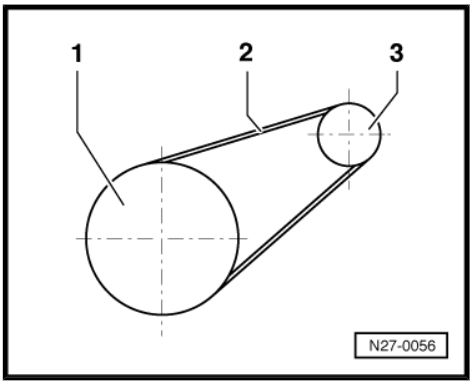

Protected by copyright. Copyright by Volkswagen AG. Volkswagen AG does not guarantee or accept any liability with respect to the correctness of information in this document. Copyright by Volkswagen AG. Protected by copyright. Copying for private or commercial purposes, in part or in whole, is not permitted unless authorised by Volkswagen AG.

4-cylinder 1.4 l fuel injection engine with power assisted steering vane pump

1 - Crankshaft/vibration damper/belt pulley

2 - Poly-V-belt - crankshaft/vibration damper, tensioning roller, alternator and power steering vane pump

3 - Belt pulley - power steering vane pump

4 - Belt pulley - alternator

5 - Tensioning roller

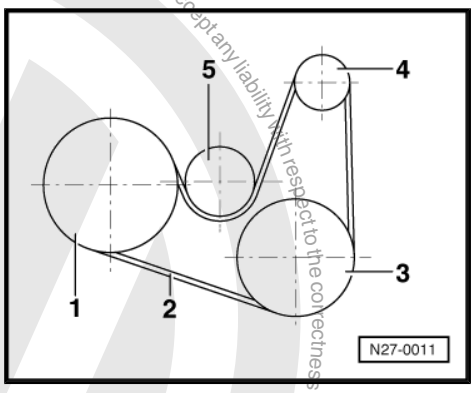

4-cylinder fuel injection engine with air conditioner compressor and power assisted steering vane pump

1 - Crankshaft/vibration damper/belt pulley

2 - Tensioning roller

3 - Belt pulley - alternator

4 - Belt pulley - air conditioner compressor

5 - Belt pulley - power steering vane pump

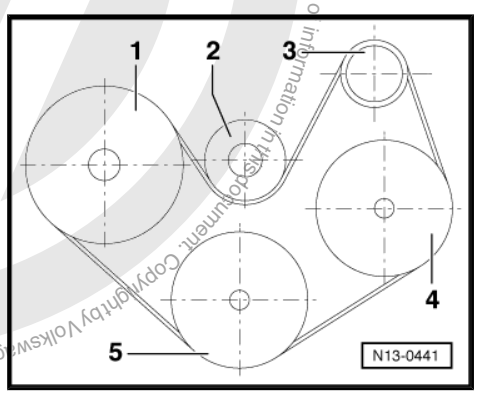

4-cylinder 1.6 l and 1.8 l fuel injection engines and diesel engines with power assisted steering vane pump

1 - Belt pulley - alternator

2 - Poly V- belt - alternator, cooling system pump, crankshaft and tensioning roller

3 - Belt pulley - cooling system pump

4 - V-belt - crankshaft and power steering vane pump

5 - Belt pulley - power steering vane pump

6 - Crankshaft/vibration damper/belt pulley

7 - Tensioning roller

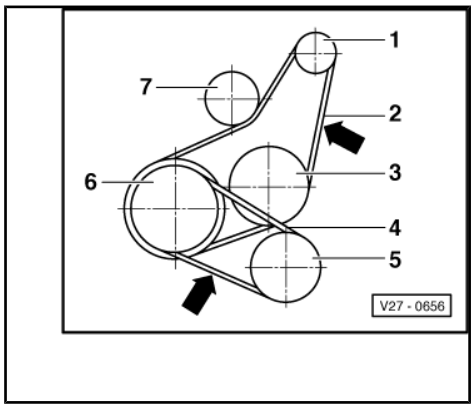

4-cylinder 1.6 l and 1.8 l fuel injection engines and diesel engines with power assisted steering vane pump and air conditioning system compressor

1 - Belt pulley - alternator

2 - Poly-V-belt - alternator, crankshaft, air conditioner compressor and tensioning roller

3 - Belt pulley - air conditioner compressor

4 - Belt pulley - cooling system pump

5 - V-belt - crankshaft, power steering vane pump and cooling system pump

6 - Belt pulley - power steering vane pump

7 - Belt pulley - crankshaft

8 - Tensioning roller

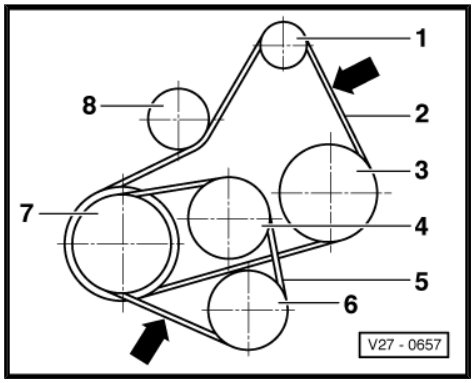

3.3 Checking V-belt

– Check for:

satelettronica

- Sub-surface cracks (cracks, core ruptures, cross sectional breaks)
- Layer separation (top layer, cord strands)
- Base break-up
- Fraying of cord strands
- Flank wear (material wear, frayed flanks, flank brittleness - glassy flanks-, surface cracks)
- Traces of oil and grease

Note

- *Mark direction of rotation before removing the V-belt. Ensure rotation of direction is correct when installing. Installing V-belt opposite to the direction of rotation will destroy the belt!*
- *If damage is established, replace V-belt immediately to prevent failure or functional faults!*

3.4 Checking poly-V-belt

Note

It is essential to renew the poly-V-belt if a fault is found. This will avoid possible breakdowns or malfunctions.

– Crank engine by hand and check poly-V-belt for:

- Sub-surface cracks (cracks, core ruptures, cross sectional breaks)
- Layer separation (top layer, cord strands)
- Base break-up
- Fraying of cord strands
- Flank wear (material wear, frayed flanks, flank brittleness - glassy flanks-, surface cracks)

3.5 Removing and installing poly-V-belt

Note

- *If the used poly-V-belt is to be reinstalled then mark the direction of rotation before removing the belt. When reinstalling, ensure the belt is installed in the correct direction of rotation. Installing the poly-V-belt opposite to the direction of rotation will destroy the belt!*
- *It is not necessary to adjust the poly-V-belt tension, as a spring loaded tensioner guarantees the best possible belt tension.*

3.5.1 4-cylinder 1.4 l fuel injection engine with basic belt drive

Special tools and workshop equipment required

Copyright by Volkswagen AG. Protected by copyright. Copyright by Volkswagen AG does not guarantee or accept any liability with respect to the correctness of information in this document. Copying for private or commercial purposes, in part or in whole, is not permitted unless authorised by Volkswagen AG.
satelettronica

- Torque wrench -V.A.G 1331-

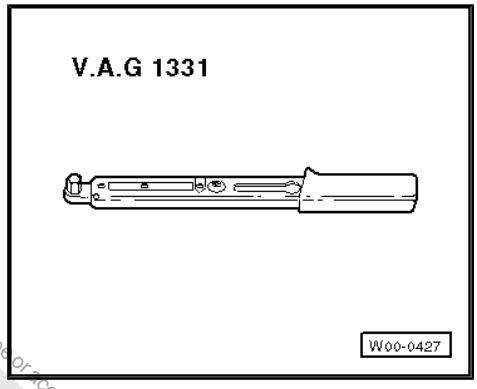

- Tensioning arm -3297-

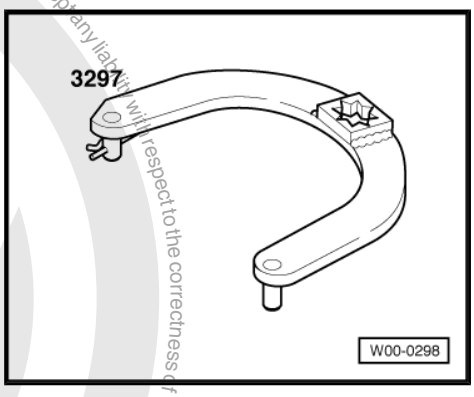

Removing:

– Mark direction of rotation of poly-V-belt if it is to be reused.

– Loosen alternator securing bolts at least one turn.

Protected by copyright. Copying for private or commercial purposes, in part or in whole, is not permitted unless authorised by Volkswagen AG. Volkswagen AG does not guarantee or accept any liability with respect to the correctness of information in this document. Copyright by Volkswagen AG.
satelettronica

Reproduction of this document or parts thereof is not permitted without written authorisation by Volkswagen AG. Volkswagen AG does not guarantee or accept any liability with respect to the correctness of information in this document. Copyright by Volkswagen AG.

– Fit tensioning lever -3297- , secure with pin -arrow- and pivot alternator downwards (use e.g. torque wrench -V.A.G 1331- to operate tensioning lever -3297-).

– Remove poly-V-belt.

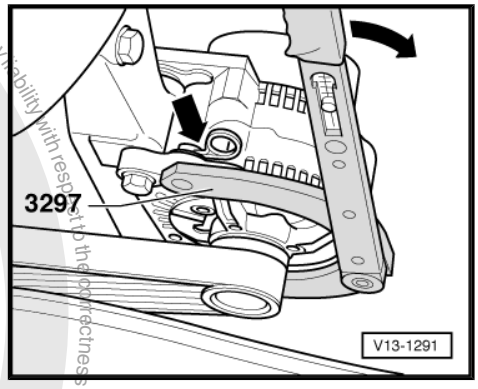

Installing:

Note

◆ *When fitting used poly-V-belts observe the direction of rotation marked on removal!*

◆ *When fitting belt, ensure that poly-V-belt seats correctly in pulleys!*

– Fit poly-V-belt on all belt pulleys. Alternator belt pulley remains free.

– Lower alternator with tensioning lever -3297- and place poly-V-belt on alternator pulley.

– Push alternator down at least 3 times onto stop with tensioning lever -3297- to ensure the alternator moves freely.

– After fitting poly-V-belt, and with alternator loose, rotate engine several times (approx. 10 revolutions of engine), to do this operate starter briefly, but do not start engine.

Note

When tightening keep to the sequence given, do not use the alternator for support and do not touch poly-V-belt.

– Tighten alternator lower securing bolt first and then upper securing bolt to 25 Nm.

– Start engine and check belt running.

3.5.2 4-cylinder fuel injection engine 1.4 l with power assisted steering and air conditioner compressor

Removing:

– Remove guard for poly-V-belt

– Mark direction of rotation of poly-V-belt if it is to be reused.

satelettronica

– Using a spanner on the securing bolt, swivel tensioning roller in direction of arrow.

– Remove poly-V-belt.

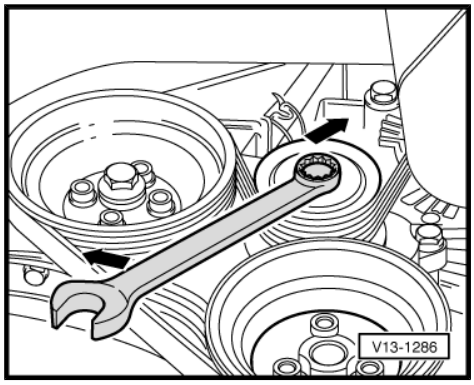

Installing:

Note

- *When fitting used poly-V-belts observe the direction of rotation marked on removal!*
- *Before installing poly-V-belt, ensure that all ancillaries (alternator, air conditioner compressor, power assisted steering vane pump) are secured tightly.*
- *When fitting belt, ensure that poly-V-belt seats correctly in pulleys!*

– Using a spanner on the securing bolt, swivel tensioning roller in direction of arrow.

– Place poly-V-belt onto crankshaft/vibration damper pulley first. Fit belt onto tensioning roller last.

– Start engine and check belt running.

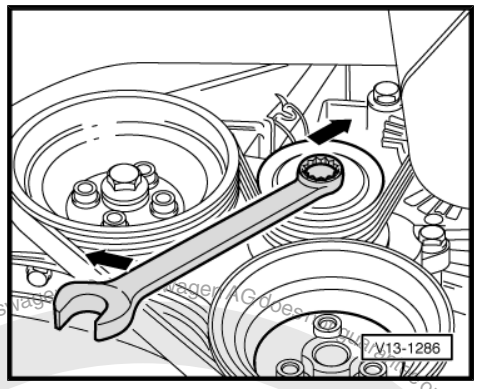

3.5.3 1.6 l and 1.8 l fuel injection engines and diesel engines

Special tools and workshop equipment required

- Lever for poly-V-belt -3299-

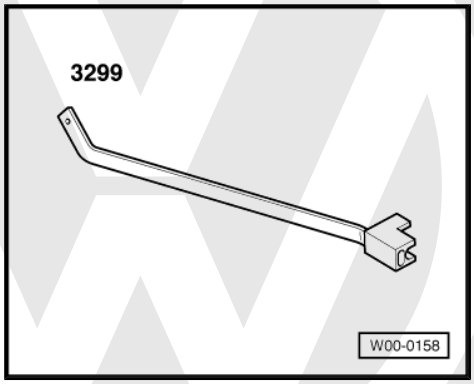

Removing:

– Mark direction of rotation of poly-V-belt if it is to be reused.

Protected by copyright. Copying for private or commercial purposes, in part or in whole, is not permitted unless authorised by Volkswagen AG. Volkswagen AG does not guarantee or accept any liability with respect to the correctness of information in this document. Copyright by Volkswagen AG.
satelettronica

– Lift tensioning roller with poly-V-belt lever -3299- and remove poly-V-belt from alternator belt pulley.

– Remove V-belt for power steering vane pump ⇒ Running gear, axles, steering; Rep. Gr. 48 ; Assembly overview - hydraulic lines, reservoirs .

– Remove poly-V-belt.

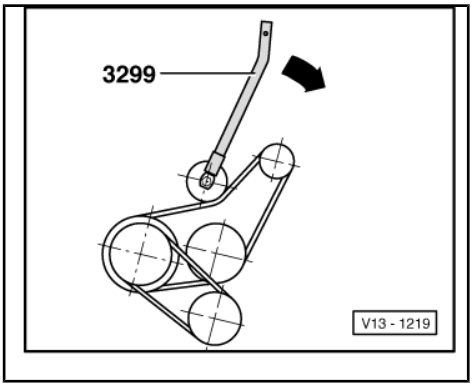

Installing belt drive with no air conditioner compressor:

Note

- *When fitting used poly-V-belts observe the direction of rotation marked on removal!*
- *When fitting belt, ensure that poly-V-belt seats correctly in pulleys!*

– Fit poly-V-belt to crankshaft pulley/vibration damper and coolant pump pulley.

– Lift tensioning roller with poly-V-belt lever -3299- and fit poly-V-belt onto alternator belt pulley.

– Lower tensioning roller onto poly-V-belt with poly-V-belt lever -3299- .

– Install V-belt for power steering vane pump ⇒ Running gear, axles, steering; Rep. Gr. 48 ; Assembly overview - hydraulic lines, reservoirs .

– Start engine and check belt running.

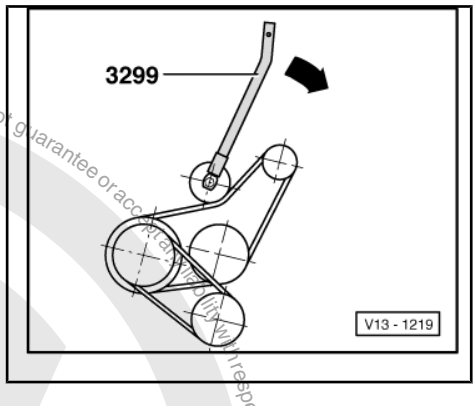

Installing belt drive with air conditioner compressor:

Note

- *When fitting used poly-V-belts observe the direction of rotation marked on removal!*
- *When fitting belt, ensure that poly-V-belt seats correctly in pulleys!*

– Fit poly-V-belt to crankshaft pulley/vibration damper and compressor pulley.

– Lift tensioning roller with poly-V-belt lever -3299- and fit poly-V-belt onto alternator belt pulley.

– Lower tensioning roller onto poly-V-belt with poly-V-belt lever -3299- .

– Install V-belt for cooling system pump and power steering vane pump ⇒ Running gear, axles, steering; Rep. Gr. 48 ; Assembly overview - hydraulic lines, reservoirs .

– Start engine and check belt running.

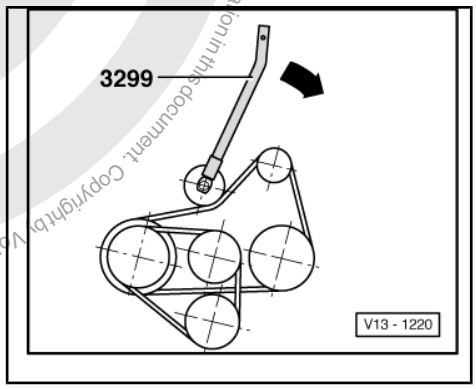

Protected by copyright. Copying for private or commercial purposes, in part or in whole, is not permitted unless authorised by Volkswagen AG. Volkswagen AG does not guarantee or accept any liability with respect to the correctness of information in this document. Copyright by Volkswagen AG.
satelettronica

3.6 Compact alternator with poly-V-belt drive, vehicles ‣ 04.99

3.6.1 Securing B+ (battery positive) wire to alternator

If the B+ wire is not secured with the specified torque setting, the following may occur:

Note

- *The battery will not be charged fully.*
- *Vehicle electrics or electronics fail completely (breakdown).*
- *Danger of fires from sparks.*
- *Damage to electronic components and control units due to excessive voltage.*

The torque setting for the B+ wire -arrow- securing nut is 15 Nm.

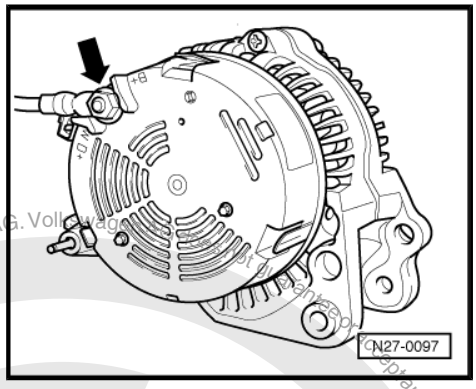

3.7 Checking carbon brushes for alternator, vehicles ‣ 04.99

Length of new carbon brushes = 12 mm

Wear limit = 5 mm

Carbon brush tolerance to one another = 1 mm.

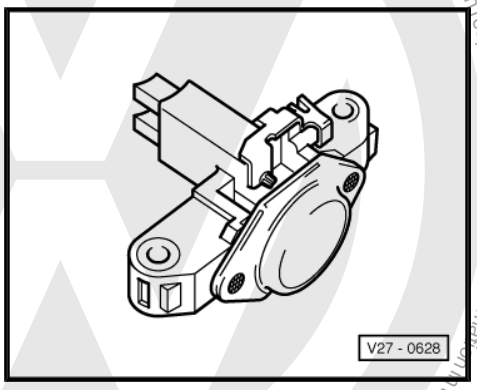

Protected by copyright. Copying for private or commercial purposes, in part or in whole, is not permitted unless authorised by Volkswagen AG. Volkswagen AG does not guarantee or accept any liability with respect to the correctness of information in this document. Copyright by Volkswagen AG.
satelettronica

3.8 Removing and installing voltage regulator for alternator, vehicles ▸ 04.99

Removing:

– Unscrew protective cap securing bolts -arrows- and remove protective cap.

– Remove voltage regulator securing screws and remove voltage regulator.

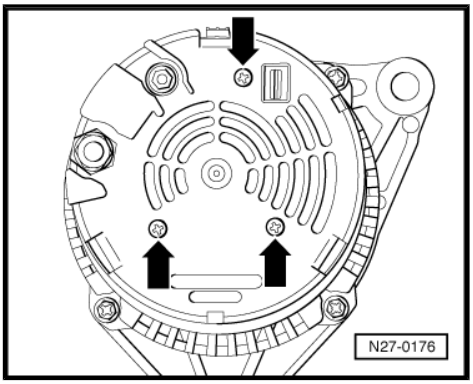

Installing:

Installation is carried out in the reverse sequence.

3.9 Compact alternator with poly-V-belt drive, vehicles 05.99 ▸

From 05.99 compact alternators with a revised shape and different terminal designation have been introduced.

External distinguishing features of new compact alternators compared to the previously used compact alternators are:

- Revised voltage regulator.
- Oval, radially sealed socket for 2-pin connector housing instead of previous square 2-pin socket.
- Revised terminal designation for connections ⇒ Current flow diagrams, Electrical fault finding and Fitting locations.

3.9.1 Securing B+ (battery positive) wire to alternator

The threaded connection for the + wire on the compact alternator is designated B1+!

If the B1+ wire is not secured with the specified torque setting the following may occur:

Note

- *The battery will not be charged fully.*
- *Vehicle electrics or electronics fail completely (breakdown).*
- *Danger of fires from sparks.*
- *Damage to electronic components and control units due to excessive voltage.*

Protected by copyright. Copying for private or commercial purposes, in part or in whole, is not permitted unless authorised by Volkswagen AG. Volkswagen AG does not guarantee or accept any liability with respect to the correctness of information in this document. Copyright by Volkswagen AG.

satelettronica

The torque setting for the securing nut of B1+ wire -arrow- is 15 Nm.

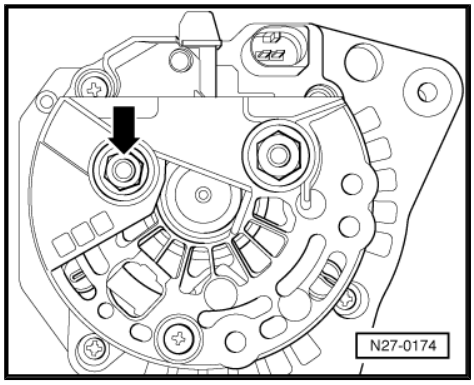

3.10 Checking carbon brushes for alternator, vehicles 05.99 ▸

Length of new carbon brushes = 12 mm

Wear limit = 5 mm

Carbon brush tolerance to one another = 1 mm.

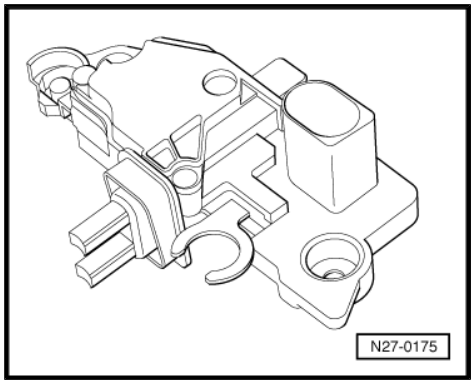

3.11 Removing and installing voltage regulator for alternator, vehicles 05.99 ▸

Removing:

– Unscrew securing nuts -arrows A- and remove securing bolt -arrow B- for protective cap and remove protective cap.

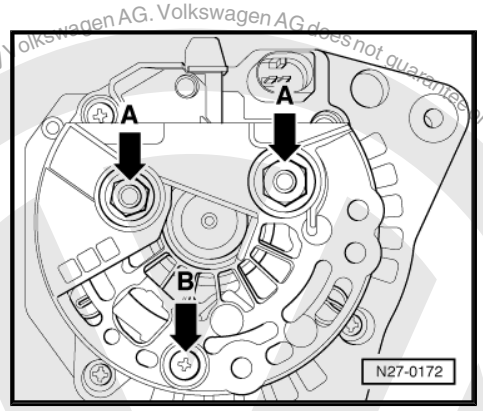

– Remove voltage regulator securing screws -arrows- and remove voltage regulator.

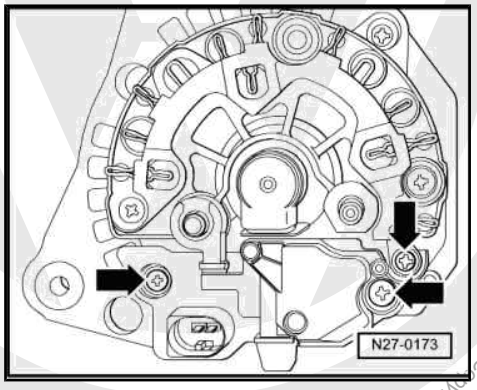

Installing:

Installation is carried out in the reverse sequence.

Protected by copyright. Copying for private or commercial purposes, in part or in whole, is not permitted unless authorised by Volkswagen AG. Volkswagen AG does not guarantee or accept any liability with respect to the correctness of information in this document. Copyright by Volkswagen AG.
satelettronica

3.12 Renewing poly-V-belt pulley on alternator

Special tools and workshop equipment required

- Torque wrench -V.A.G 1332-

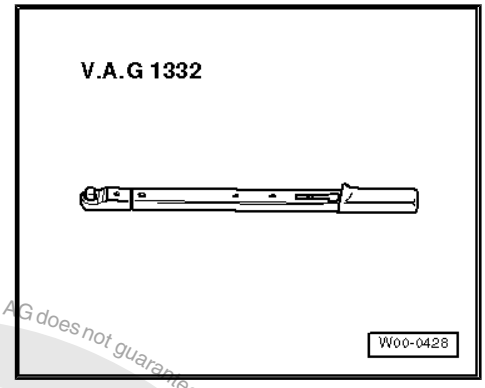

- Socket -3310-

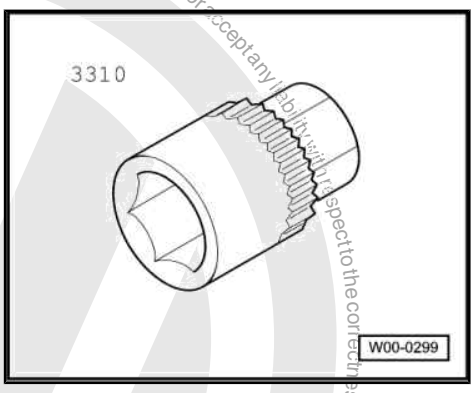

3.12.1 Removing and installing poly-V-belt pulley on alternator

Use socket drive -3310- to loosen and tighten poly-V-belt pulley on alternator.

The torque setting for the securing nut of the poly-V-belt pulley is 65 Nm.

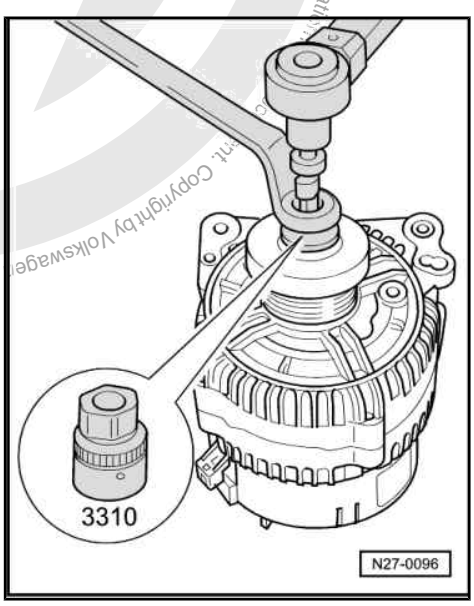

Protected by copyright. Copying for private or commercial purposes, in part or in whole, is not permitted unless authorised by Volkswagen AG. Volkswagen AG does not guarantee or accept any liability with respect to the correctness of information. Copyright by Volkswagen AG.
satelettronica

3.13 Removing and installing poly-V-belt pulley with freewheel

Note

- *A freewheel belt pulley can be retrofitted in vehicles fitted with a Bosch alternator ‣ 04.99.*
- *A freewheel belt pulley cannot be retrofitted in vehicles with a Valeo alternator ‣ 04.99.*
- *Valeo alternators must be renewed complete for a Bosch alternator.*
- *On alternators 05.99 ‣ the belt pulley with freewheel is the same on all alternators used (different manufacturers).*

Protected by copyright. Copyright for private or commercial purposes, in part or in whole, is not permitted unless authorised by Volkswagen AG. Volkswagen AG does not guarantee or accept any liability with respect to the correctness of information in this document. Copyright by Volkswagen AG.

3.13.1 Installing poly-V-belt pulley with freewheel

Special tools and workshop equipment required

- Torque wrench -V.A.G 1332-

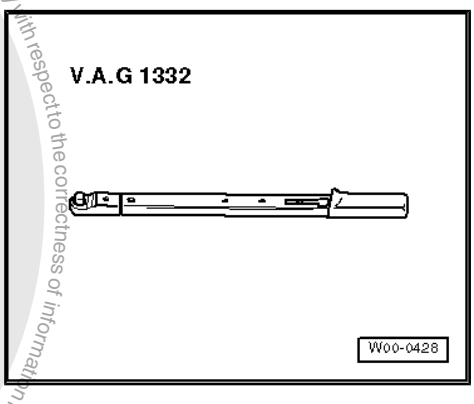

- Adapter -3400-

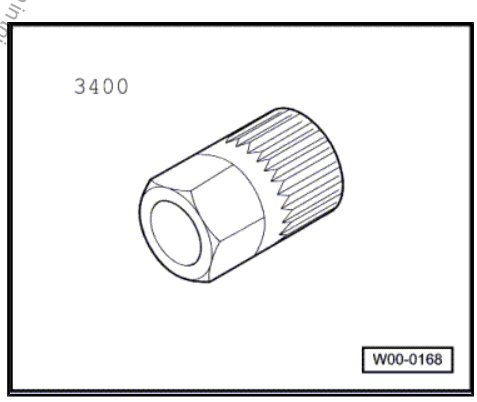

– First remove installed poly-V-belt pulley ⇒ page 61 .

– Insert adapter -3400- in freewheel pulley.

– First screw freewheel pulley by hand onto alternator drive shaft to stop.

Before installing freewheel pulley, set up torque wrench as follows:

satelettronica

– Release socket drive -1- and pull off grip -2-.
– Turn torque wrench grip -2- 180° and reinsert socket drive.
– Set turning direction of torque wrench to anti-clockwise at socket drive.
– Set torque wrench setting to 80 Nm.
– Fit 6 mm key into alternator drive shaft.

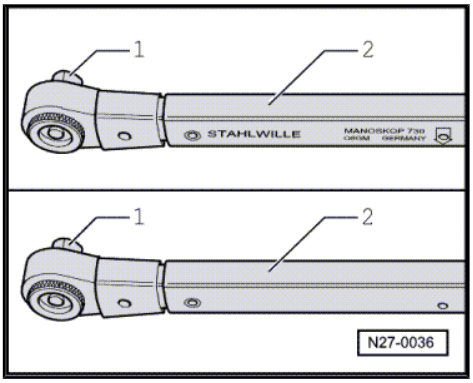

– Counterhold adapter -3400- with 17 mm ring spanner and tighten freewheel disc to 80 Nm by turning alternator drive shaft anti-clockwise with torque wrench.
– Clip protective cap onto freewheel pulley.

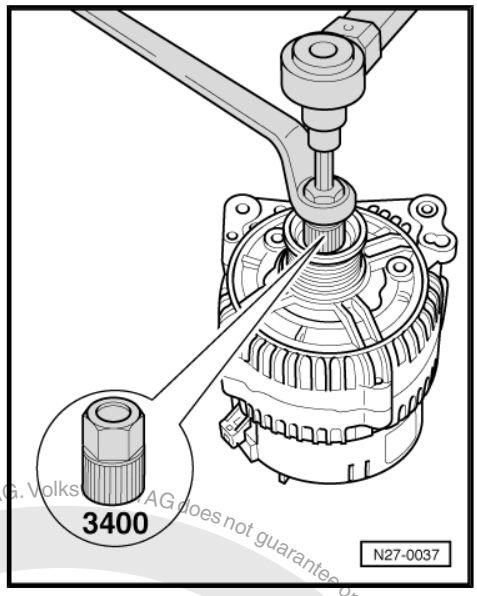

Protected by copyright. Copying for private or commercial purposes, in part or in whole, is not permitted unless authorised by Volkswagen AG. Volkswagen AG does not guarantee or accept any liability with respect to the correctness of information in this document. Copyright by Volkswagen AG.
satelettronica

90 – Gauges, instruments

1 Dash panel insert

1.1 Removing and installing dash panel insert

Protected by copyright. Copy, distribution, publication or other use of this document in whole or in part or in whole, is not permitted unless authorised by Volkswagen AG. Volkswagen AG does not guarantee or accept any liability with respect to the correctness of information in this document. Copyright by Volkswagen AG.

WARNING

Before working on the electrical system disconnect the battery earth strap.

Note

- *If vehicle has a security-coded radio, obtain anti-theft code before disconnecting battery.*
- *When the battery is reconnected, check the vehicle equipment (radio, clock, electrically operated windows) as per Workshop Manual and/or the Owner's Manual.*
- *There is no need to remove the steering wheel. For ease of illustration the steering wheel is not shown in the following illustrations.*

Removing:

– Remove upper securing bolts -arrows-.

– Pull plastic trim out forwards.

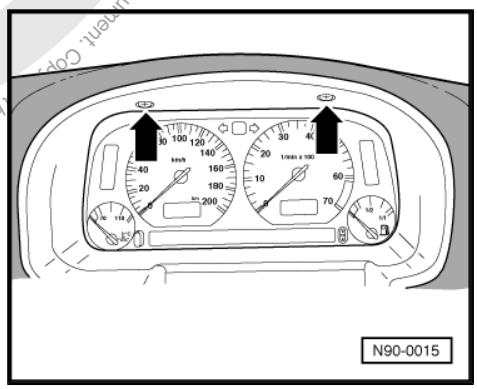

– Remove the two securing screws on left and right -arrows-.

– Fold dash panel insert out forwards.

– Disconnect multi-pin connectors on back of dash panel insert.

– Take out dash panel insert.

Installing:

Install in reverse order of removal.

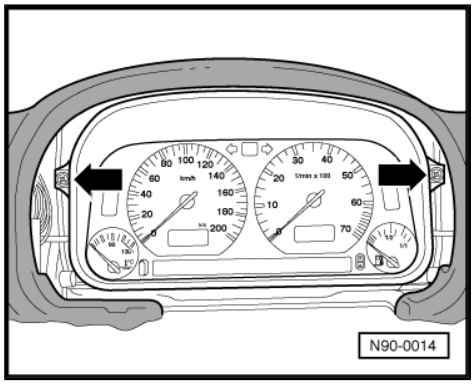

satelettronica

Copyright by Volkswagen AG. Volkswagen AG does not guarantee or accept any liability with respect to the correctness of information in this document. Copyright by Volkswagen AG. Not to be sold or used for commercial purposes, in part or in whole, is not permitted unless authorised by Volkswagen AG.

1.2 Renewing bulbs in dash panel insert (VDO)

Note

- *The dash panel insert must not be dismantled.*
- *Information on checking voltages and bulbs with test box - V.A.G 1598- ⇒ Current flow diagrams, Electrical fault finding and Fitting locations.*
- *Fault finding programs for specific systems and current circuits ⇒ Current flow diagrams, Electrical fault finding and Fitting locations.*

1 - Bulb with holder (dash panel insert illumination bulb - L10-)

- ❑ 12 V/1.2 W

2 - Bulb with holder (right turn signal warning lamp -K94-)

- ❑ 12 V/1.1 W

3 - Bulb with holder (main beam warning lamp -K1-)

- ❑ 12 V/1.1 W

4 - Bulb with holder (left turn signal warning lamp -K65-)

- ❑ 12 V/1.1 W

5 - Bulb with holder (digital clock illumination bulb)

- ❑ 12 V/1.1 W

6 - Bulb with holder (odometer display illumination bulb)

- ❑ 12 V/1.1 W

7 - Multi-pin connector on dash panel insert

- ❑ Pin assignment ⇒ page 68

8 - Bulb with holder (various warning lamps, dependant on equipment installed in vehicle)

- ❑ 12 V/1.1 W

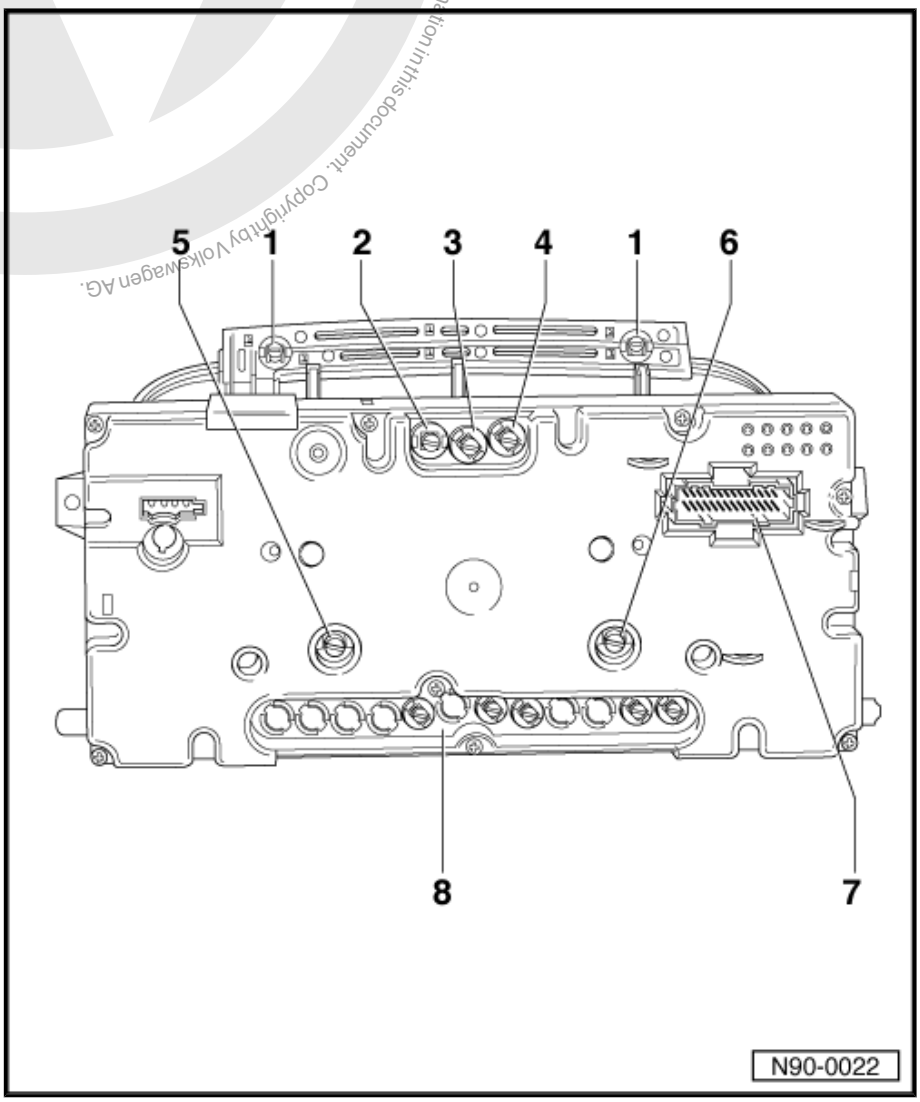

satelettronica

1.3 Renewing bulbs in dash panel insert (MOTOMETER)

Protected by copyright. Copying for private or commercial purposes, in part or in whole, is not permitted unless authorised by Volkswagen AG. Volkswagen AG does not guarantee or accept any liability with respect to the correctness of information in this document. Copyright by Volkswagen AG.

Note

- *The dash panel insert must not be dismantled.*
- *Information on checking voltages and bulbs with test box - V.A.G 1598- ⇒ Current flow diagrams, Electrical fault finding and Fitting locations.*
- *Fault finding programs for specific systems and current circuits ⇒ Current flow diagrams, Electrical fault finding and Fitting locations.*

1 - Bulb with holder (dash panel insert illumination bulb -L10-)

- ❑ 12 V/1.2 W

2 - Bulb with holder (right turn signal warning lamp -K94-)

- ❑ 12 V/1.1 W

3 - Bulb with holder (main beam warning lamp -K1-)

- ❑ 12 V/1.1 W

4 - Bulb with holder (left turn signal warning lamp -K65-)

- ❑ 12 V/1.1 W

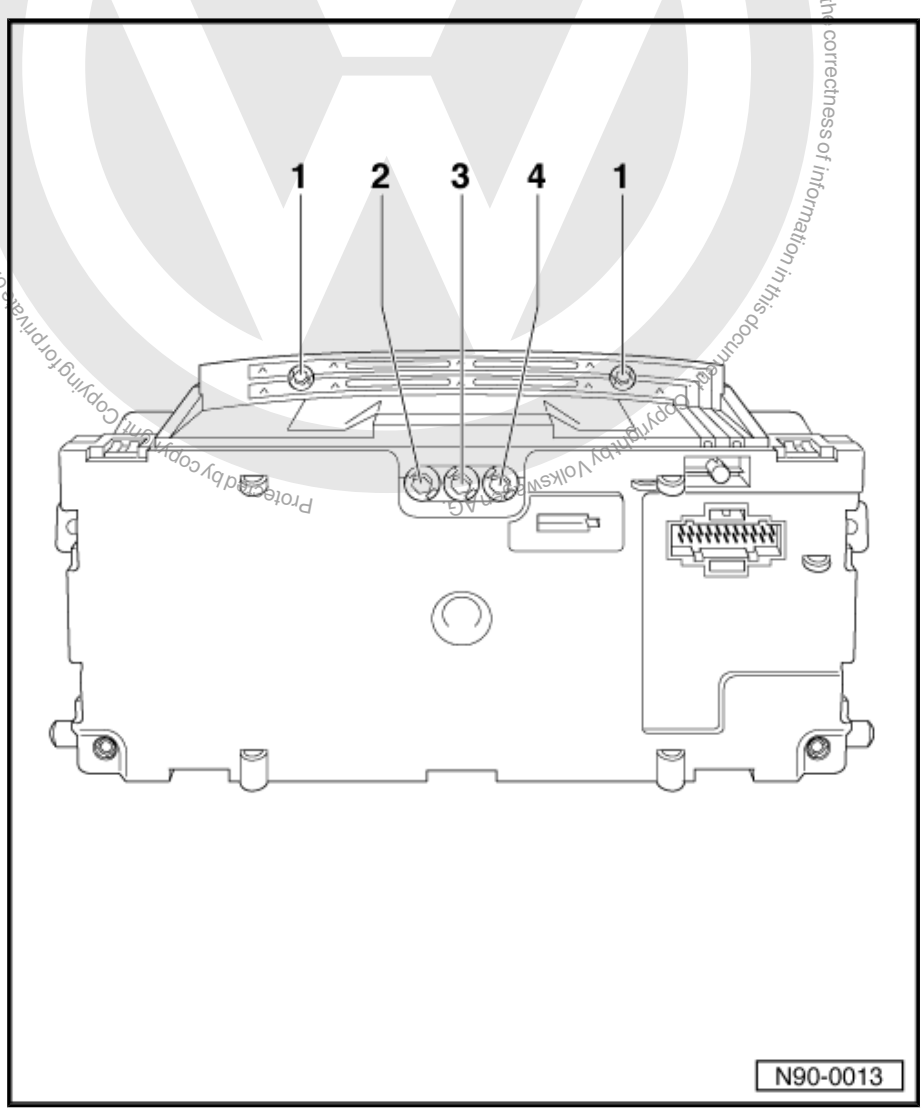

satelettronica

1.4 Dash panel insert warning lamp symbols (VDO unit)

1 - Left turn signal

2 - Main beam

3 - Right turn signal

4 - Fuel reserve warning (not fitted)

5 - Fog lights (not fitted)

6 - ABS (not fitted)

7 - Brake wear warning (not fitted)

8 - Brake warning/brake system fault warning

9 - Glow period warning

10 - Alternator

11 - Oil pressure

12 - Airbag (not fitted)

13 - Side mounted repeater turn signals/side lights (not fitted)

14 - Rear fog light

15 - Coolant

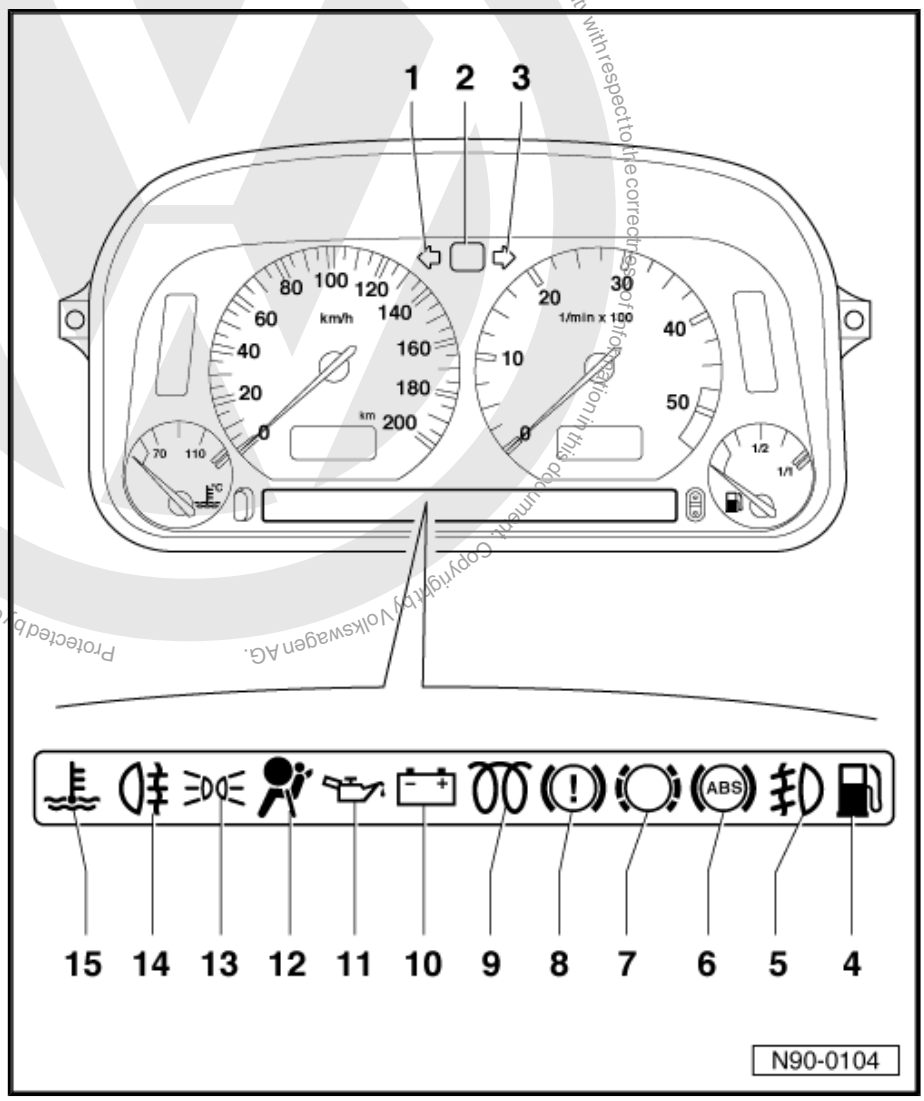

satelettronica

1.5 Pin assignment on dash panel insert

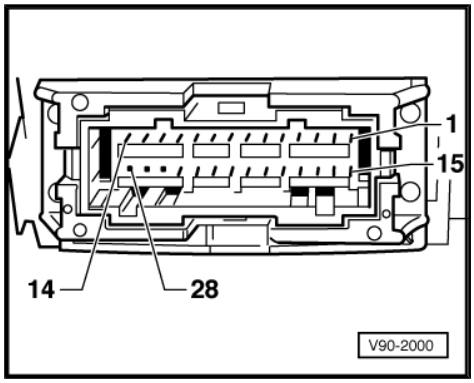

1 - Vacant

2 - Cooling system low level indicator

3 - Terminal 31, earth

4 - Vacant

5 - Terminal 31, electronics earth

6 - MFI save switch (memory)

7 - Hall/inductive sender, output

8 - Oil pressure switch, 1.8 bar

9 - Oil pressure switch, 0.3 bar

10 - Terminal 1/terminal W

11 - Terminal 30 battery positive, clock

12 - Terminal 58b, dash panel insert illumination

13 - Terminal 15, general

14 - Belt

15 - Vacant

16 - Alternator warning lamp, terminal 61

17 - Vacant

18 - Twin circuit brakes and handbrake system warning lamp

19 - Ambient temperature sensor, signal

20 - Glow period warning lamp / CAT / check / choke

21 - Fuel gauge

22 - Left turn signal warning lamp

23 - Coolant temperature gauge

24 - Right turn signal warning lamp

25 - Main beam warning lamp

26 - Vacant

27 - Speed signal from speedometer sender -G22- , electronic speedometer input

28 - Rear fog light

Protected by copyright. Copying for private or commercial purposes, partially or completely, is not permitted unless authorised by Volkswagen AG. Volkswagen AG does not guarantee or accept any liability with respect to the correctness of information in this document. Copyright by Volkswagen AG.

satelettronica

2 Service interval display

2.1 Service interval display

2.1.1 Functioning

The service interval display electronics is comprised of, amongst other items:

- one time recorder

and

- one distance recorder.

The electronics evaluates both recorders so that the customer is informed

- after a predetermined time period is exceeded or
- after a predetermined distance is reached

via the service interval display that a service is required (according to whichever occurs first).

2.1.2 Service interval display

After the ignition is switched on the display appears for several seconds instead of the distance display in the odometer displays.

If no service is required: IN 00 will be displayed.

When a service is due, one of the following types of service will flash for approx. 3 seconds after the engine is started (Service table):

OEL or OIL	(oil change service) or
IN 01	(Inspection service every 12 months) or
IN 02	(Inspection service every 30,000 km)

After a service is performed, the service type and all types falling earlier must be called-up individually and reset.

- If inspection service IN 02 is performed: reset OEL (OIL), IN 01 and IN 02.
- If inspection service IN 01 is performed: only reset OEL (OIL) and IN 01.

2.2 Resetting service interval display

– With ignition switched on, press and hold in button -arrow A- below speedometer.

– Switch off ignition and release button. The word OEL or OIL will appear in display -arrow C-.

– Depress the lower of both buttons -arrow B- for the digital clock until five dashes (- - - - -) appear. Only then is the service reset.

– Depressing the button -arrow A- below the speedometer again will individually call-up the other types of service which can also be reset.

– Switch ignition on and once IN 00 has appeared switch ignition off again.

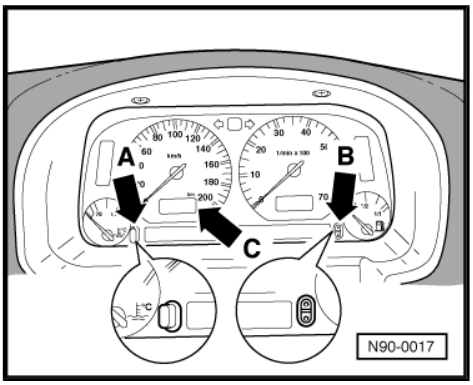

satelettronica

2.3 Flexible service interval display

The flexible service interval display was introduced as of model year 1996 but only for models with a 1.9 l/47 kW diesel engine with catalytic converter - engine code 1Y.

2.3.1 Functioning

The flexible service interval display monitors not only the distance and time but also

- the temperature of the engine oil

and the

- carbon concentration of the engine oil

electronically and calculates the service intervals accordingly.

Depending on the driving conditions (load on engine and way vehicle is driven) the distance to the next service is set between 7,500 km and 15,000 km or a period of between 8 to 12 months.

Other displays are displayed on vehicles with flexible service intervals.

After the ignition is switched on the display appears for several seconds instead of the distance display in the odometer displays.

If no service is required: INSP-0 will be displayed.

When a service is due, one of the following types of service will flash for approx. 3 seconds after the engine is started (Service table):

2.3.2 Service table

Indicated on display:	Type of service:
OEL (OIL) alternating with INSP	Oil change service
or:	
INSP-1	Inspection service every 12 months
or:	
INSP-2	Inspection service every 30,000 km

After a service is performed, the service type and all types falling earlier must be called-up individually and reset.

2.4 Resetting flexible service interval display

- If inspection service INSP-2 is performed: reset OEL (OIL), INSP-1 and INSP-2.
- If inspection service INSP-1 is performed: only reset OEL (OIL) and INSP-1.

Reset display as follows:

Protected by copyright. Copyright by Volkswagen AG. Volkswagen AG does not guarantee or accept any liability with respect to the correctness of information in this document. Copyright by Volkswagen AG. Copying for private or commercial purposes, partially or in whole, is not permitted unless authorised by Volkswagen AG.
satelettronica

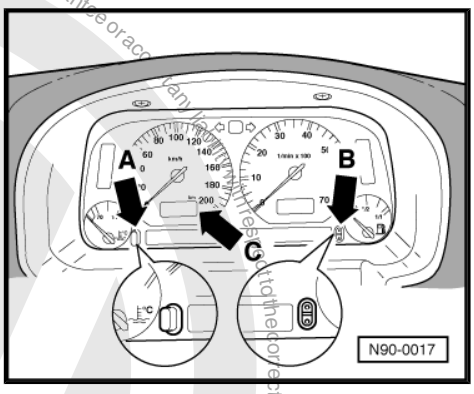

– With ignition switched on, press and hold in button -arrow A- below speedometer.
– Switch off ignition and release button. The word OEL or OIL will appear in display.
– Depress the lower of both buttons -arrow B- for the digital clock until five dashes (- - - - -) appear. Only then is the service reset.
– Depressing the button -arrow A- below the speedometer again will individually call-up the other types of service which can also be reset.
– Switch ignition on and once IN 00 has appeared switch ignition off again.

2.5 Entering service interval data

Note

- *Only required when changing a dash panel insert.*
- *The data must be read out before changing the dash panel insert.*
- *If the data cannot be read (defective dash panel insert) the data from the servicing schedule for the vehicle and the odometer reading must be entered.*

2.5.1 Displaying service types

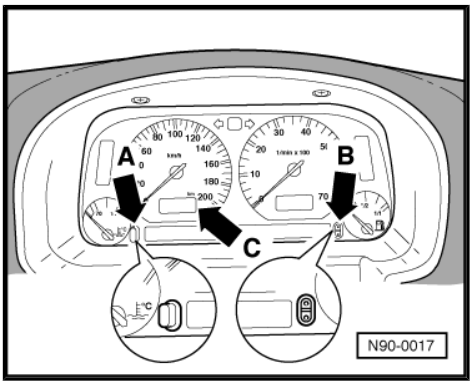

– With ignition switched on, press and hold in button -arrow A- below speedometer.
– By additionally pressing the minute button for the digital clock (lower pressure point of button -arrow B-) the other service types are displayed. OEL1.S (or OIL1.S) appears in the odometer display -arrow C-.
– By pressing and repeatedly pressing button -arrow A- below the speedometer the following displays appear: OEL2.S (or OIL2.S), IN01.S, IN02.S.

Note

The "S" means "Set"

2.5.2 Explanation of types of service

OEL1.S (or OIL1.S)	Distance recorder for oil change service
OEL2.S (or OIL2.S)	Time recorder for oil change service
IN01.S	Time recorder for inspection service every 12 months
IN02.S	Distance recorder for inspection service every 30,000 km

satelettronica

2.5.3 Entering data

- Pressing the minute button for the digital clock (lower pressure point of button -arrow B-) displays remaining distance or time to next type of service.
- Pressing again will lower the reading of the distance recorder in steps of 500 km and the time recorder in steps of 1 month. Once the lowest figure is reached the figures will start again at the highest figure.
- If the ignition is switched of or the engine started the mode (entering data) will be terminated.

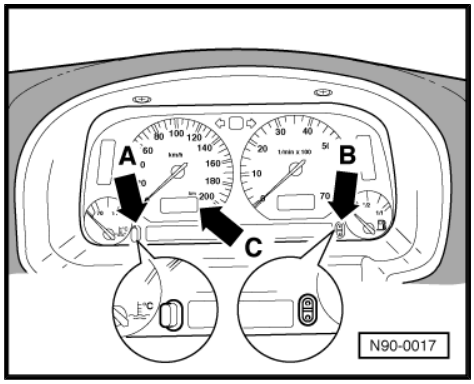

Protected by copyright. Copying for private or commercial purposes, in part or in whole, is not permitted unless authorised by Volkswagen AG. Volkswagen AG does not guarantee or accept any liability with respect to the correctness of information in this document. Copyright by Volkswagen AG.

satelettronica

92 – Windscreen wash/wipe system

1 Windscreen wiper system

WARNING

Before working on the electrical system disconnect the battery earth strap.

Note

- *If vehicle has a security-coded radio, obtain anti-theft code before disconnecting battery.*
- *When the battery is reconnected, check the vehicle equipment (radio, clock, electrically operated windows) as per Workshop Manual and/or the Owner's Manual.*

1.1 Assembly overview - windscreen wiper system

1 - Wiper motor
- ❑ Removing wiper frame ⇒ page 75 .

2 - Drive shaft

3 - Connecting rod

4 - Crank
- ❑ Setting park position ⇒ page 76

5 - 13 mm hexagon nut
- ❑ 20 Nm

6 - Cover cap

7 - 15 mm hexagon nut
- ❑ 16 Nm

8 - Wiper arm

9 - Wiper blade
- ❑ Adjusting park position ⇒ page 77

10 - Wiper blade rubber
- ❑ Removing and installing rubber blade ⇒ page 78 .

11 - Wiper frame

12 - 10 mm hexagon bolt
- ❑ 5 Nm

13 - 10 mm hexagon bolt
- ❑ 5 Nm

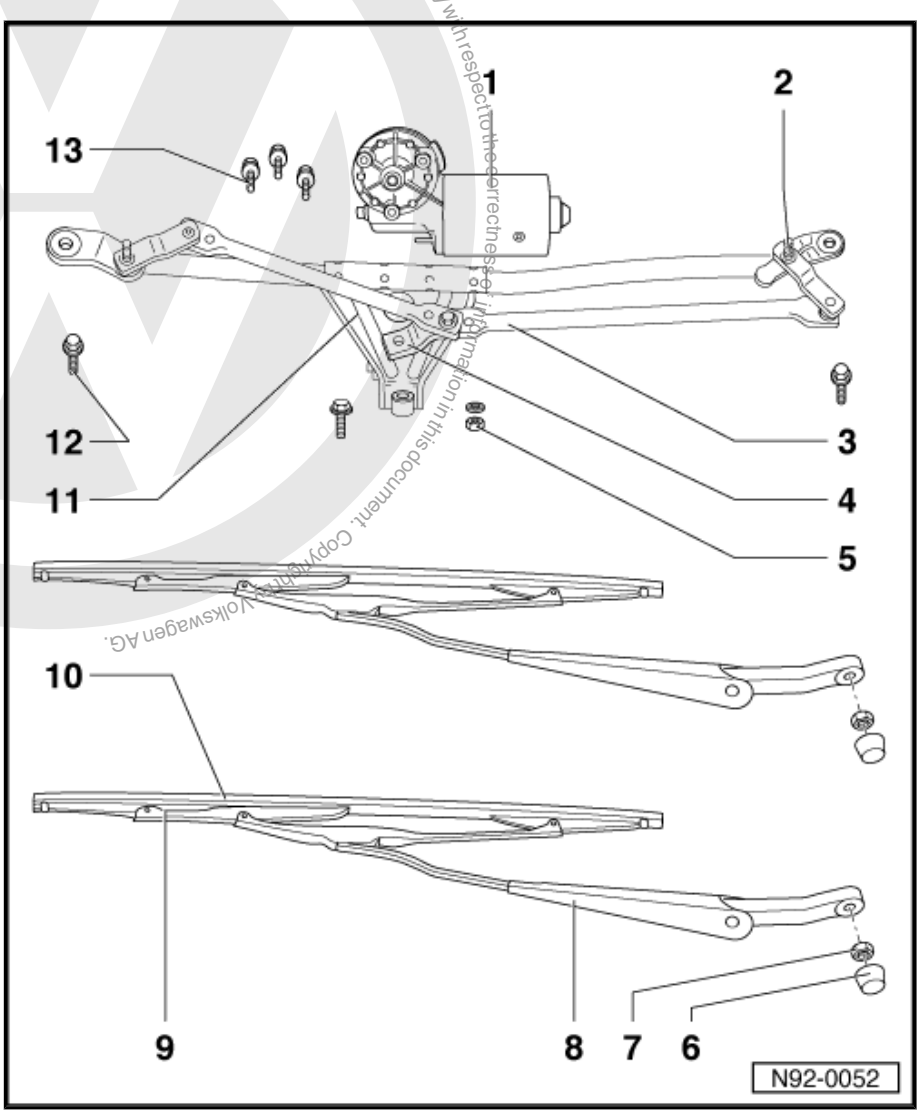

satelettronica

1.2 Removing and installing windscreen wiper system

Special tools and workshop equipment required

- Torque wrench -V.A.G 1331-

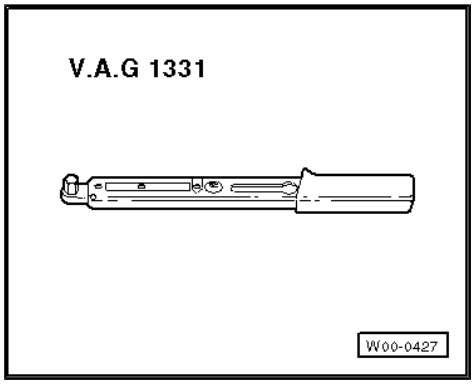

1.2.1 Removing wiper arms

Note

Before removing the wiper arms check that the wiper motor is in park position. Only then can the wiper arm park position be correctly set when installing.

– Lever off black cover caps -arrows- with a screwdriver.

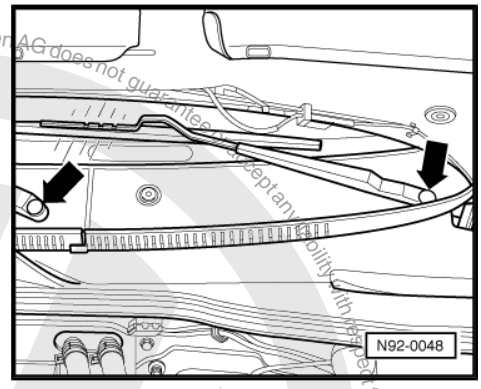

– Loosen hexagon nuts -arrows- but do not remove completely.
– Move wiper arms lightly until they release.
– Remove hexagon nuts completely and remove wiper arms.

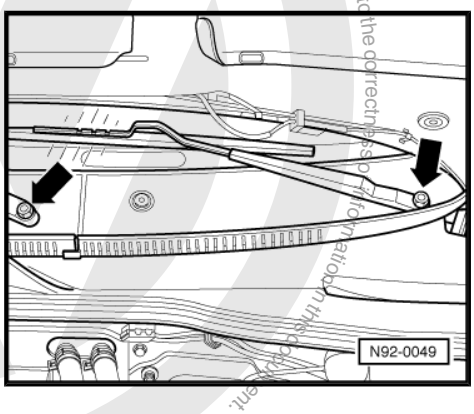

Protected by copyright. Copying for private or commercial purposes, in part or in whole, is not permitted unless authorised by Volkswagen AG. Volkswagen AG does not guarantee or accept any liability with respect to the correctness of information in this document. Copyright by Volkswagen AG.
satelettronica

1.2.2 Removing cowl panel

– Remove plastic screws -arrows-.
– Carefully lever both parts of cowl panel grille upwards.

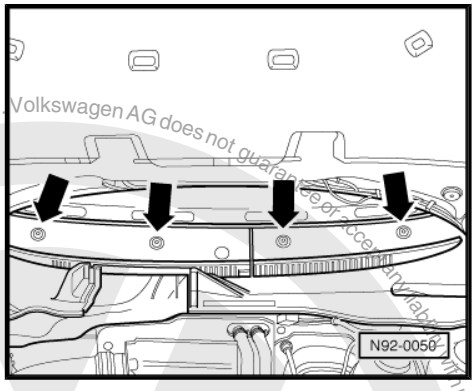

1.2.3 Removing wiper frame with linkage and wiper motor

– Remove hexagon nuts and hexagon bolts -arrows- and washers.
– Pull connector off wiper motor.
– Remove wiper frame complete.

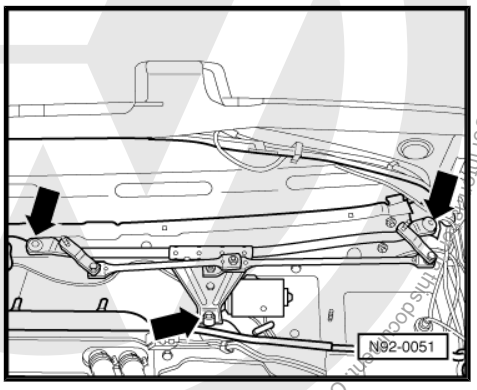

1.2.4 Removing wiper motor from wiper frame

– Lever rods -1- off crank -3- using a large screwdriver.
– Remove M8 hexagon nut -4-.
– Remove crank -3-.
– Remove the three M6 securing bolts -2- for the wiper motor.

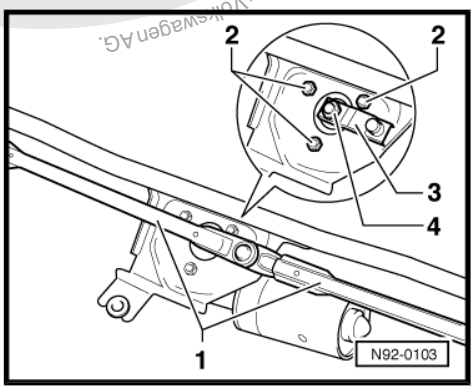

1.2.5 Installing wiper motor in wiper frame

– Run motor to park position by connecting connector and operating wiper switch briefly.

Protected by copyright. Copying for private or commercial purposes, in part or in whole, is not permitted unless authorised by Volkswagen AG. Volkswagen AG does not guarantee or accept any liability with respect to the correctness of information in this document. Copyright by Volkswagen AG.
satelettronica

– Disconnect connector again and secure motor by tightening M6 securing bolts -2- . Torque setting: 5 Nm.

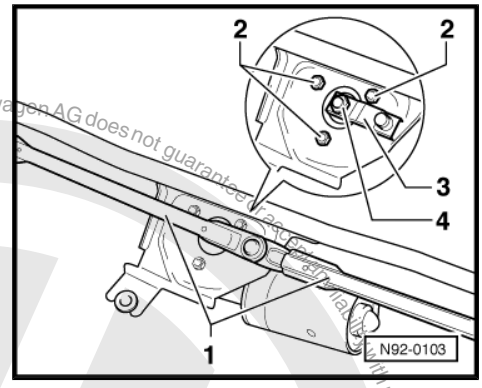

1.2.6 Setting park position

– Run wiper motor to park position and install.

– First press connecting rod -2- onto the loose crank -3- and then press on connecting rod -1-.

– Align connecting rods -1- and -2- to the centre line shown in the figure.

– Tighten nut on crank -3-.

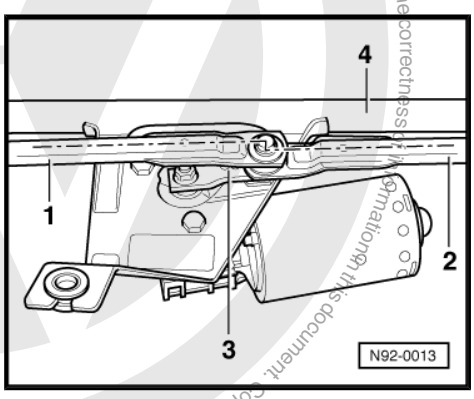

1.2.7 Installing wiper frame with linkage and wiper motor

– Insert wiper frame with wiper motor.

– Attach connector to wiper motor.

– Fit washers and tighten hexagon nuts and bolts -arrows-.

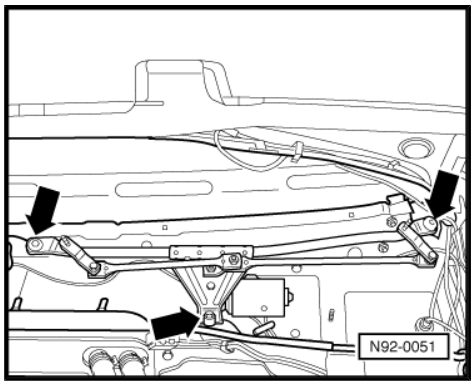

1.2.8 Installing cowl panel

– Fit cowl panel.

Protected by copyright. Copying for private or commercial purposes, in part or in whole, is not permitted unless authorised by Volkswagen AG. Volkswagen AG does not guarantee or accept any liability with respect to the correctness of information in this document. Copyright by Volkswagen AG.
satelettronica

– Tighten plastic screws -arrows-.

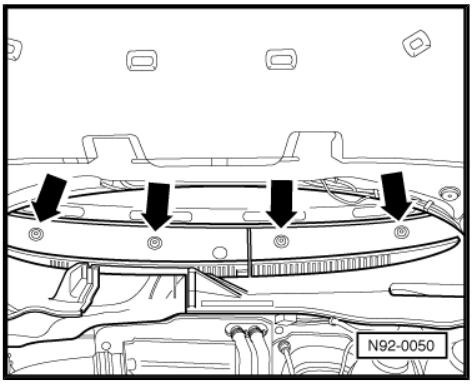

1.2.9 Installing wiper arms

– Fitting wiper arms.

– Adjust wiper blade park position ⇒ page 77 .

– Tighten hexagon nuts -arrows-.

Wiper arm torque setting: 16 Nm.

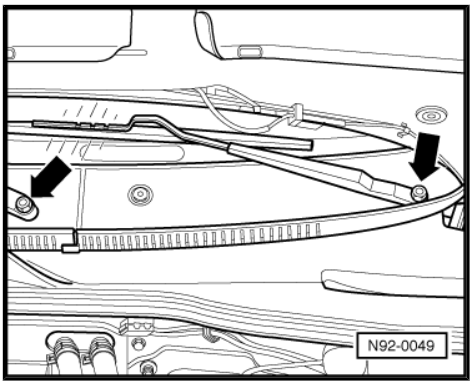

– Fit black cover caps -arrows-.

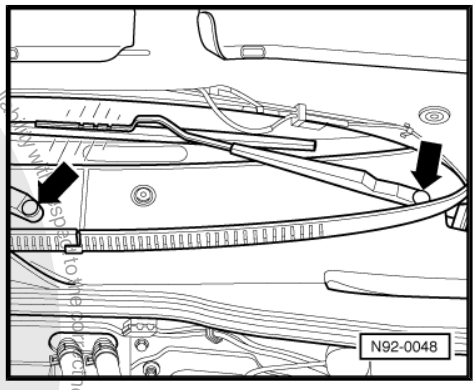

1.2.10 Adjusting wiper blade park position

– Set wiper blades at markings in windscreen.

a = Marking for left-hand drive vehicles

b = Marking for right-hand drive vehicles

Wiper arm torque setting: 16 Nm.

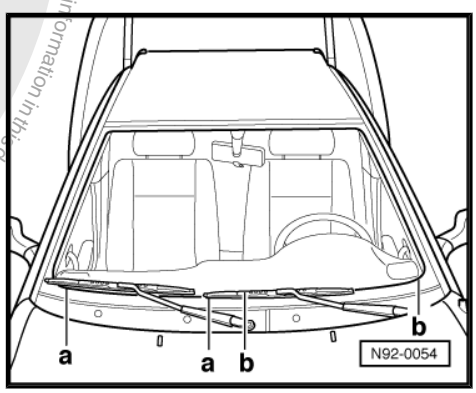

Protected by copyright. Copyright by Volkswagen AG.
Copyright for valet commercial purposes, in part or in whole, is not permitted unless authorised by Volkswagen AG. Volkswagen AG does not guarantee or accept any liability with respect to the correctness of information in this document.
satelettronica

1.3 Removing and installing wiper rubber blade

– Using a pair of pliers press together both steel strips on the enclosed side of the wiper rubber, slide sideways out of the upper clip and remove rubber complete with strips from the other clips of the wiper blades.

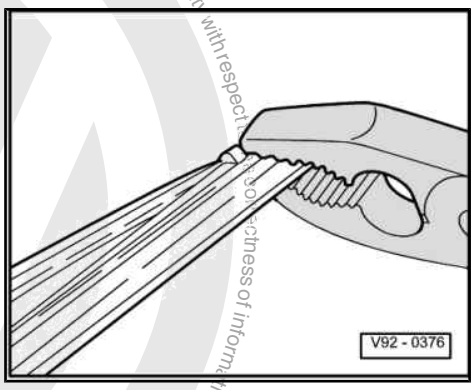

– Fit new rubber insert into lower clips of wiper blade.

– Guide both strips into the first groove of the wiper rubber so that the recesses in the strips face the rubber and engage in the rubber lugs of the groove.

– Using pliers press both steel strips and rubber together and insert into the upper clips so that the lugs of the clips on both sides engage in the retaining slots -arrow- of the wiper blade rubber insert.

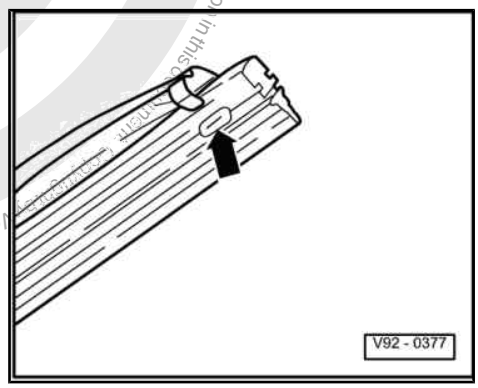

Protected by copyright. Copyright by Volkswagen AG. Volkswagen AG does not guarantee or accept any liability with respect to the correctness of information in this document. Copying for private or commercial purposes, in part or in whole, is not permitted unless authorised by Volkswagen AG.
satelettronica

2 Windscreen washer and headlight washer system

2.1 Assembly overview - windscreen washer and headlight washer system

1 - Windscreen washer system jets

- ❑ Removing ⇒ page 81
- ❑ Adjusting ⇒ page 79

2 - Windscreen washer jets hose

3 - Windscreen washer pump

4 - Reservoir

- ❑ Removing ⇒ page 81

5 - Headlight washer system pump

6 - Headlight washer system hoses

7 - Back-pressure valve

- ❑ Note hose connections

8 - Jets

- ❑ Adjusting ⇒ page 79
- ❑ Before removing: remove front bumper ⇒ General body repairs, exterior; Rep. Gr. 63 ; Bumpers; Front bumper .

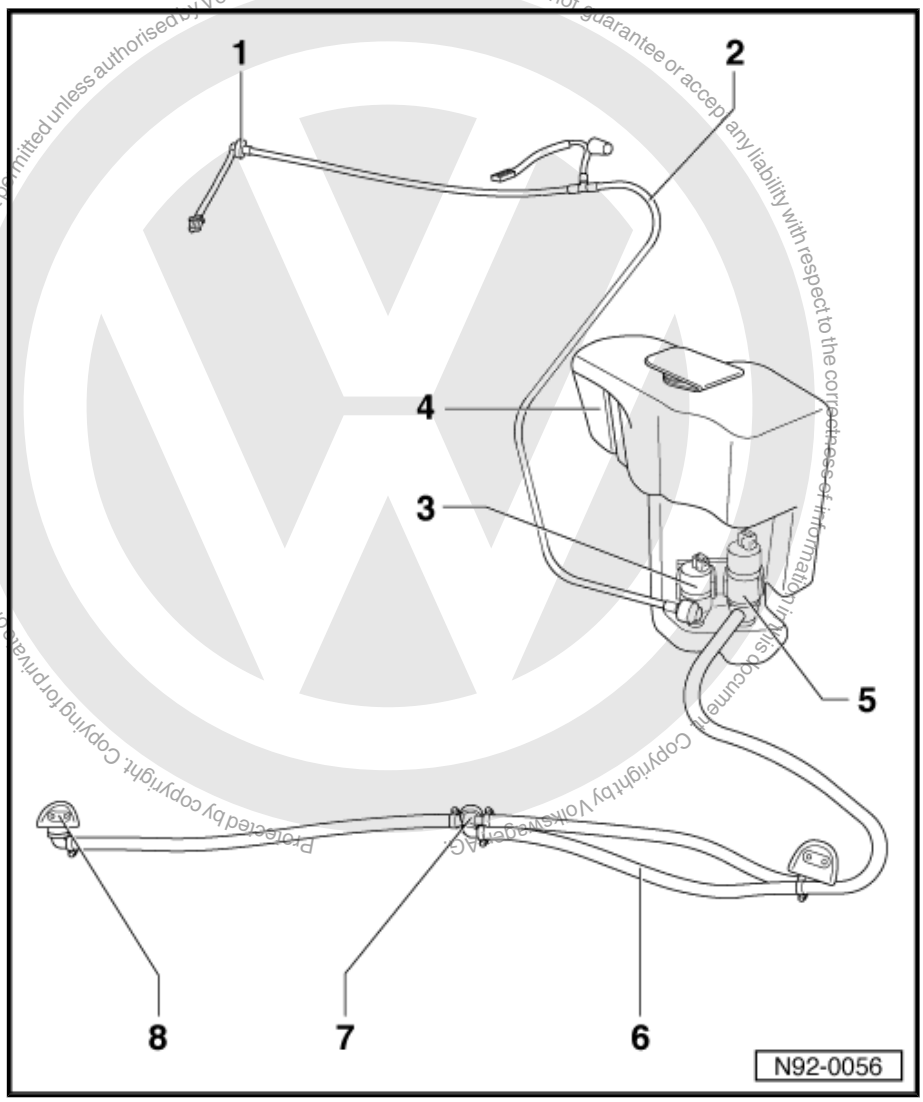

Protected by copyright. Copying for private or commercial purposes, in part or in whole, is not permitted unless authorised by Volkswagen AG. Volkswagen AG does not guarantee or accept any liability with respect to the correctness of information in this document. Copyright by Volkswagen AG.

satelettronica

2.2 Adjusting windscreen washer system jets

Special tools and workshop equipment required

Protected by copyright. Copying for private or commercial purposes, in part or in whole, is not permitted unless authorised by Volkswagen AG. Volkswagen AG does not guarantee or accept any liability with respect to the correctness of information in this document. Copyright by Volkswagen AG.

♦ Adjusting tool -T10127- with needles (Qty. 5) -3125/5 A-

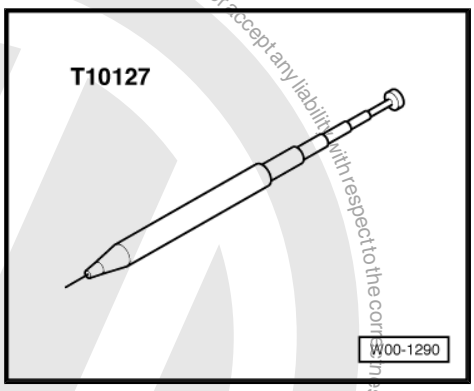

Note

♦ *Renew spray jet if spray is irregular or cannot be adjusted to the prescribed setting.*

♦ *Never use a needle or similar object, as otherwise water passages in washer spray jets will be damaged!*

– Check jet settings and adjust washer spray jets if necessary using adjusting tool -T10127- with needles (Qty. 5) -3125/5 A- .

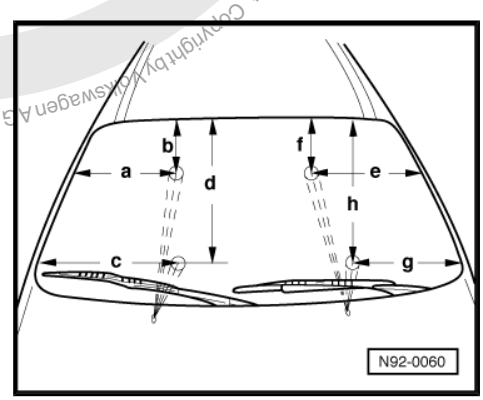

a	280 mm	e	400 mm
b	300 mm	f	330 mm
c	430 mm	g	330 mm
d	560 mm	h	560 mm

Tolerance: ± 20 mm

2.3 Adjusting headlight washer system jets

Special tools and workshop equipment required

♦ Adjusting device -3019 A-

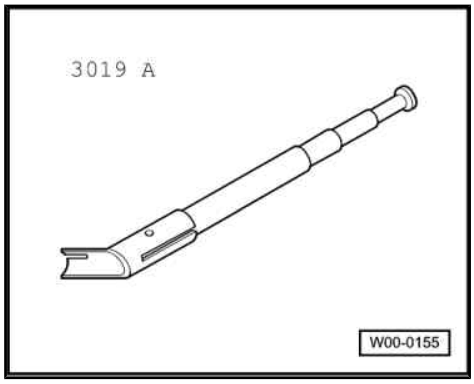

Carry out following procedures:

satelettronica

The following washer spray jet setting figures are for the left headlight (right headlight is a mirror image):

– Check washer spray jet settings.

Right headlight:

– Set outer right-hand spray jet to following dimensions:

a - 130 mm

b - 60 mm

– Set inner right-hand spray jet to following dimensions:

c - 65 mm

d - 125 mm

– Adjust jet with adjusting tool -3019 A- if necessary.

Jet dimensions for the left headlight are a mirror image.

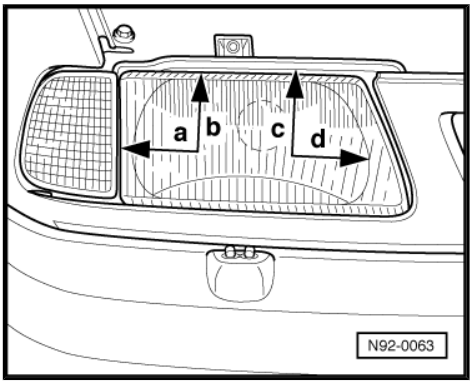

2.4 Removing windscreen washer system spray jets

– Pull hose off jets and disconnect 2-pin connector -arrows-.

– Press locking lug on jet back and push jet out upwards.

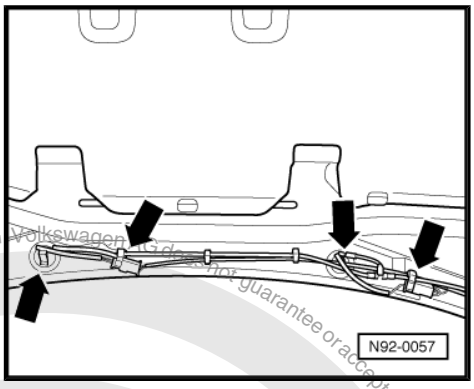

2.5 Removing headlight washer system spray jets

– Remove front bumper ⇒ General body repairs, exterior; Rep. Gr. 63 ; Bumpers; Front bumper .

– Pull hoses off jets -arrows-.

– Remove jet securing screws -arrows- and remove jet.

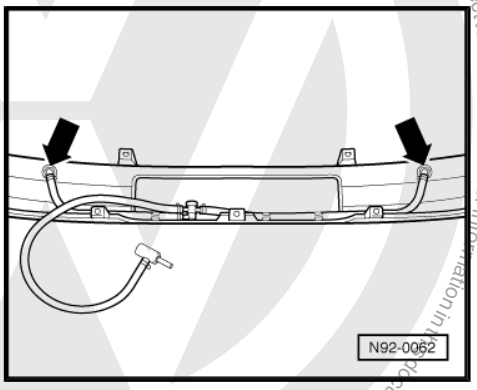

2.6 Removing windscreen washer and headlight washer system reservoir

Carry out following procedures:

– Pull off hose to windscreen washer spray jets at pump.

– Pull off hoses to headlight spray jets from the pump.

satelettronica
Protected by copyright. Copying for private or commercial purposes, in part or in whole, is not permitted unless authorised by Volkswagen AG. Volkswagen AG does not guarantee or accept any liability with respect to the correctness of information in this document. Copyright by Volkswagen AG.

– Pull connector off windscreen washer pump.
– Pull connector off windscreen washer pump.
– Unscrew securing nut -arrow- on front of reservoir.
– Take reservoir carefully out upwards.

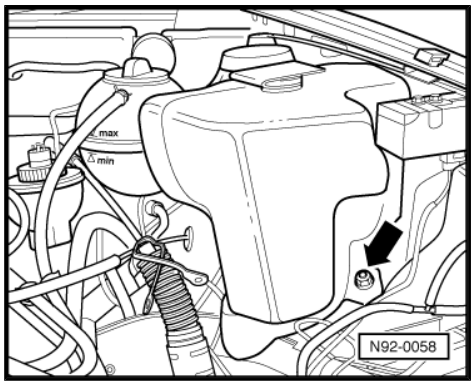

Protected by copyright. Copying for private or commercial purposes, in part or in whole, is not permitted unless authorised by Volkswagen AG. Volkswagen AG does not guarantee or accept any liability with respect to the correctness of information in this document. Copyright by Volkswagen AG.

satelettronica

3 Rear window wipe/wash system

WARNING

Before working on the electrical system disconnect the battery earth strap.

Note

- *If vehicle has a security-coded radio, obtain anti-theft code before disconnecting battery.*
- *When the battery is reconnected, check the vehicle equipment (radio, clock, electrically operated windows) as per Workshop Manual and/or the Owner's Manual.*

3.1 Assembly overview - rear window wiper system (Caddy)

1 - Cover cap

2 - 13 mm hexagon nut
- ❑ 15 Nm

3 - Washer

4 - Wiper arm with wiper blade
- ❑ Adjusting park position ⇒ page 85
- ❑ Removing and installing rubber blade ⇒ page 78 .

5 - 22 mm hexagon nut
- ❑ 7 Nm

6 - Plastic washer

7 - Rubber ring

8 - Spacer

9 - Rubber ring

10 - Wiper motor
- ❑ Removing ⇒ page 86

11 - 10 mm hexagon bolt
- ❑ 5 Nm

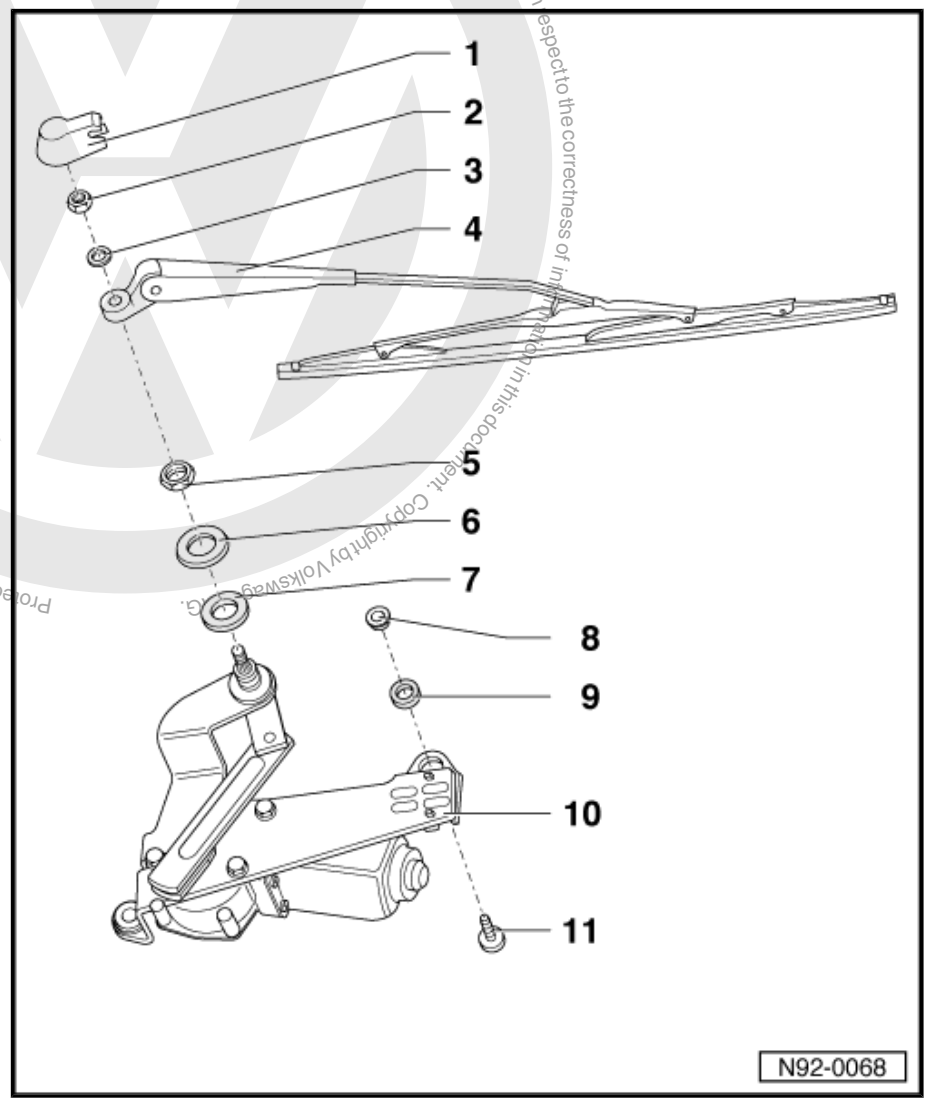

Protected by copyright. Copyright by Volkswagen AG. Volkswagen AG, Volkswagen AG does not guarantee or accept any liability with respect to the correctness of information in this document. Copyright by Volkswagen AG. Protected by copyright. Copying for private or commercial purposes, in part or in whole, is not permitted unless authorised by Volkswagen AG.
satelettronica

3.2 Assembly overview - rear window wiper system (Polo Variant)

1 - 10 mm hexagon bolt

2 - Rubber ring

3 - Spacer

4 - Wiper motor

- ❑ Removing ⇒ page 88

5 - Rubber ring

6 - Cover cap

7 - 22 mm hexagon nut

8 - Wiper arm

- ❑ Adjusting park position ⇒ page 85
- ❑ Removing and installing rubber blade ⇒ page 78 .

9 - 13 mm hexagon nut

10 - Cover cap

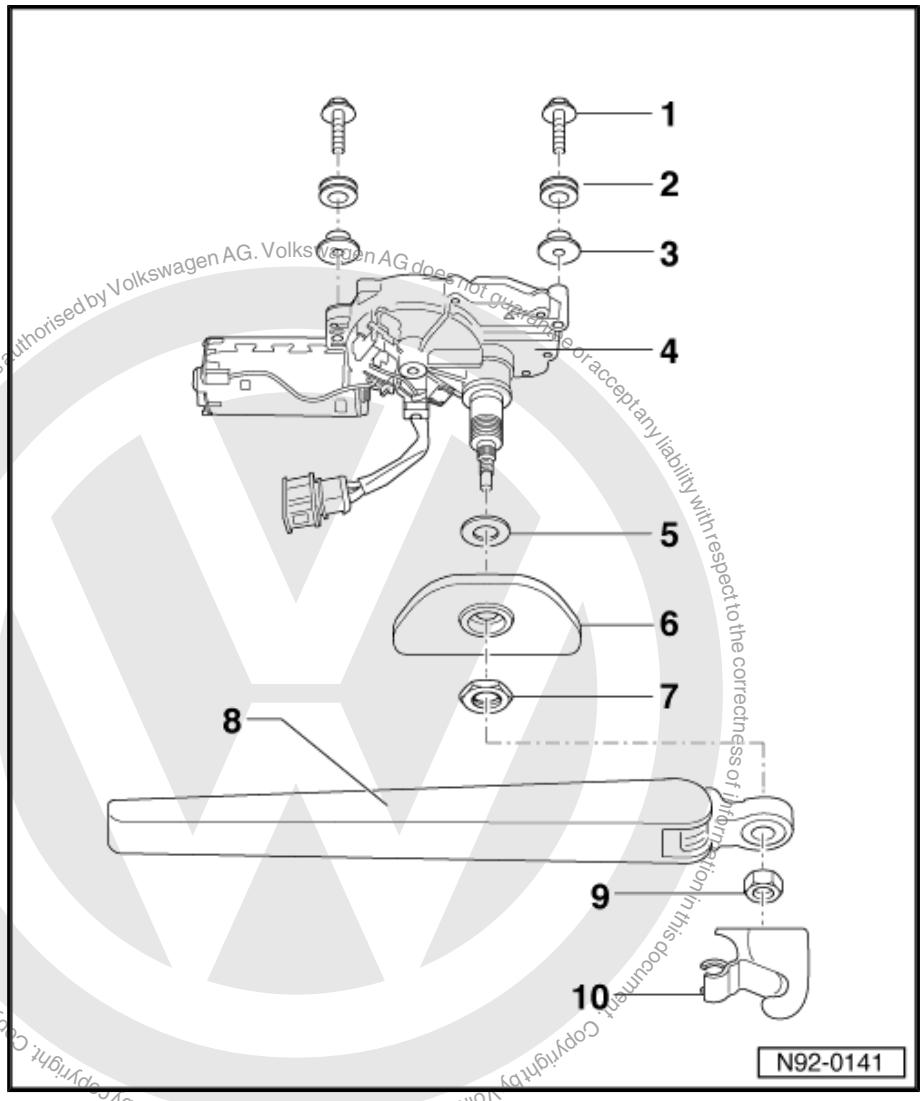

Protected by copyright. Copying for private or commercial purposes, in part or in whole, is not permitted unless authorised by Volkswagen AG. Volkswagen AG does not guarantee or accept any liability with respect to the correctness of information in this document. Copyright by Volkswagen AG.

3.3 Adjusting rear window wiper park position

Special tools and workshop equipment required

- ♦ Torque wrench -V.A.G 1331-

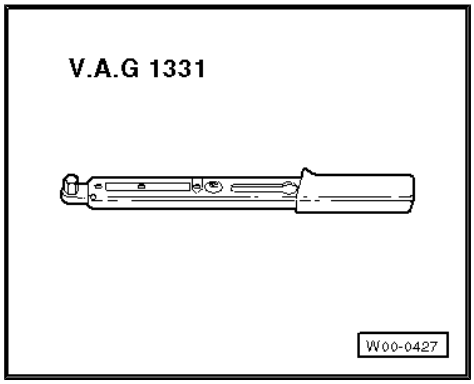

satelettronica

3.3.1 Caddy

Distance -a- between wiper blade and lower edge of window should be 15 mm.

– Adjust park position by moving wiper arm as necessary. Wiper arm torque setting: 15 Nm.

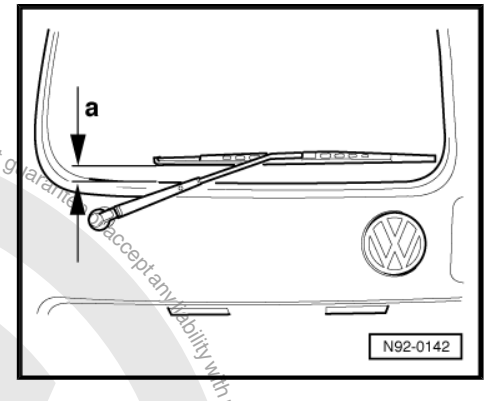

3.3.2 Polo Variant

Distance -a- between wiper blade and lower edge of window should be 25 mm.

– Adjust park position by moving wiper arm as necessary. Wiper arm torque setting: 15 Nm.

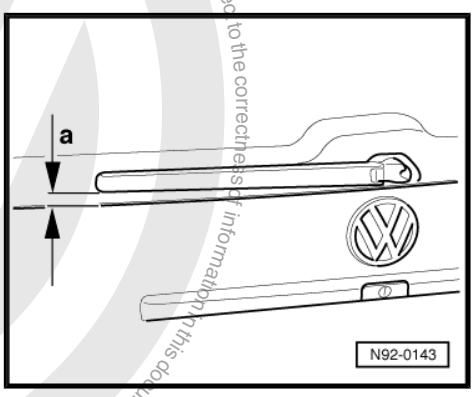

3.4 Adjusting washer jet

Special tools and workshop equipment required

♦ Adjusting tool -T10127- with needles (Qty. 5) -3125/5 A-

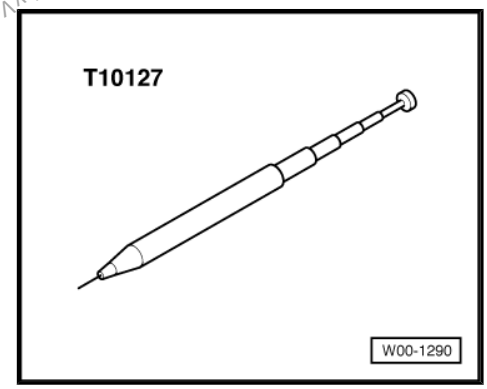

Note

♦ *Renew washer spray jet if spray is irregular or cannot be adjusted to centre of wiped area.*

♦ *Never use a needle or similar object, as otherwise water passages in washer spray jets will be damaged!*

– Check spray jet setting.

Rear window washer spray jet settings:

Spray jet must spray to centre of wiped area.

Protected by copyright. Copying for private or commercial purposes, in part or in whole, is not permitted unless authorised by Volkswagen AG. Volkswagen AG does not guarantee or accept any liability with respect to the correctness of information in this document. Copyright by Volkswagen AG.
satelettronica

– Adjust washer spray jet using adjusting tool -T10127- with needles (Qty. 5) -3125/5 A- , if necessary.

3.5 Removing rear window wiper (Caddy)

Removing rear window wiper system (Polo Variant)
⇒ page 87 .

3.5.1 Removing wiper arm

– Open cover cap.

– Loosen 13 mm hexagon nut -arrow-.

– Fold wiper arm up and release from taper by moving arm sideways.

– Remove hexagon nut and take wiper arm off.

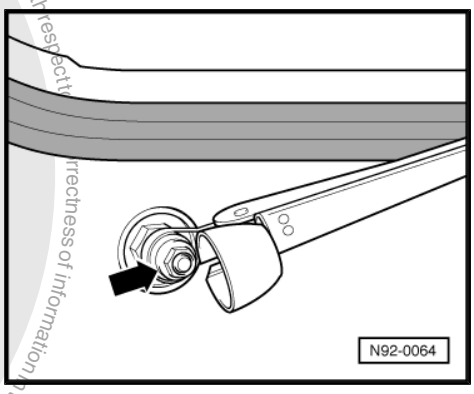

3.5.2 Removing rear lid trim

– Carefully pull trim off all round.

– Renew plastic clips if damaged.

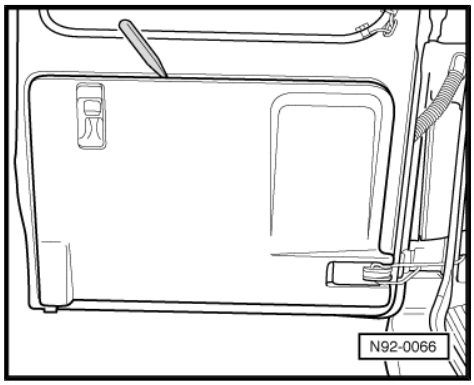

3.5.3 Removing rear wiper motor

– Unscrew 22 mm hexagon nut -arrow-.

– Remove plastic washer and rubber ring.

– Pull connector off wiper motor.

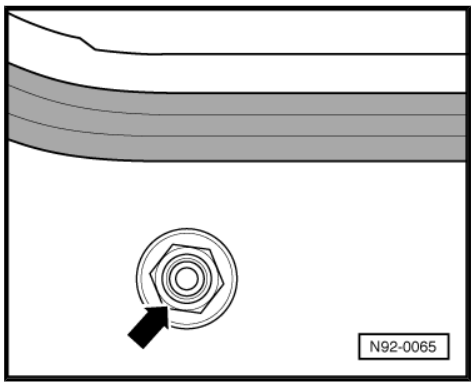

Protected by copyright. Copyright by Volkswagen AG.
Volkswagen AG does not guarantee or accept any liability with respect to the correctness of information in this document.
This document is protected by Volkswagen AG. Reproduction or publication for commercial purposes, in part or in whole, is not permitted without the author's consent.
satelettronica

– Remove 10 mm hexagon bolts -arrows- and remove wiper motor.

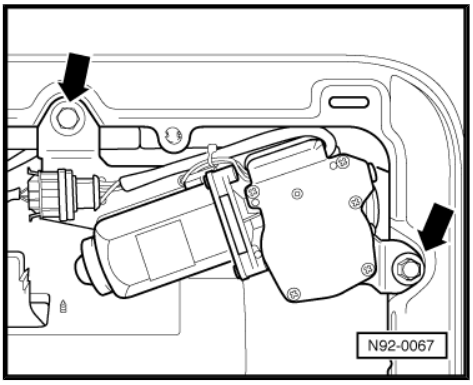

3.6 Removing rear window wiper system (Polo Variant)

3.6.1 Removing wiper arm

– Open cover cap.
– Loosen 13 mm hexagon nut -arrow-.
– Fold wiper arm up and release from taper by moving arm sideways.
– Remove hexagon nut and take wiper arm off.

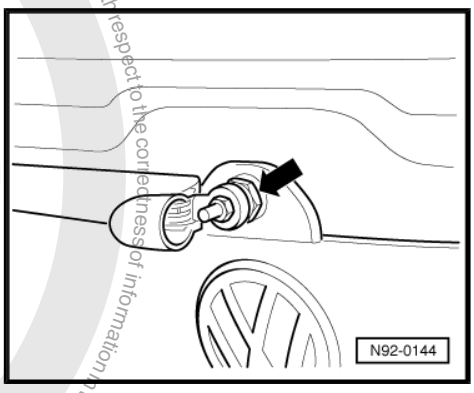

3.6.2 Removing rear lid trim

– Remove cross-head screws (in grip recess) -arrows-.
– Carefully pull trim off all round and remove.

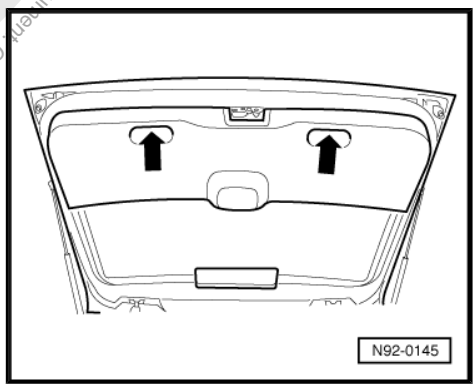

Protected by copyright. Copyright by Volkswagen AG. Volkswagen AG does not guarantee or accept any liability with respect to the correctness of information in this document. Copying for private or commercial purposes, in part or in whole is not permitted unless authorised by Volkswagen AG.
satelettronica

3.6.3 Removing rear wiper motor

– Remove 22 mm hexagon nut -1- and remove cover cap -2-.

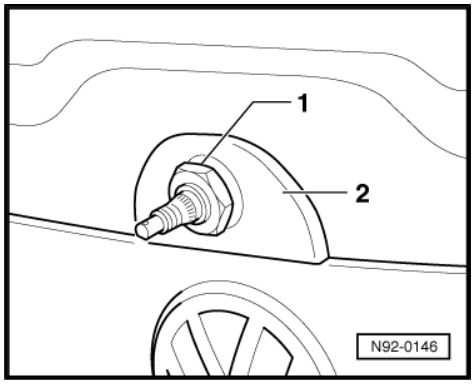

– Pull connector -1- off wiper motor.
– Pull off hose -2- to washer jet.
– Remove 10 mm hexagon bolts -arrows- and remove wiper motor.

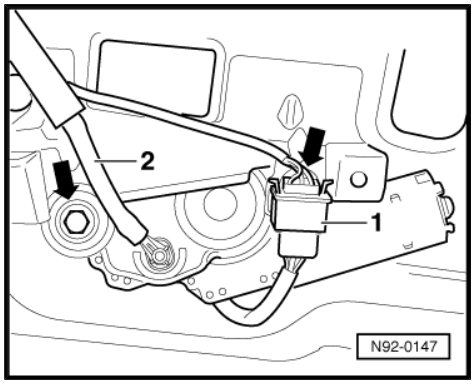

satelettronica

Protected by copyright. Copying for private or commercial purposes, in part or in whole, is not permitted unless authorised by Volkswagen AG. Volkswagen AG does not guarantee or accept any liability with respect to the correctness of information in this document. Copyright by Volkswagen AG.

94 – Lights, bulbs, switches - exterior

1 Headlight

1.1 Assembly overview - headlight

WARNING

Always disconnect the battery earth strap before working on the electrical system.

Note

After any measures which could affect the headlight setting, the headlight must be checked and if necessary adjusted ⇒ page 90 .

1 - Headlight

- ❑ Checking headlight settings ⇒ page 90
- ❑ Removing and installing ⇒ page 90

2 - Side light bulb

Bulb 12 V, 4 W

- ❑ Renewing ⇒ page 90

3 - Side light bulb holder

4 - Cap

5 - Spring retaining clip

6 - Twin filament bulb for main and dipped beams

Bulb H4 12 V, 60 W/55 W

- ❑ Renewing ⇒ page 91

7 - Headlight range control motor

- ❑ Removing and installing ⇒ page 91

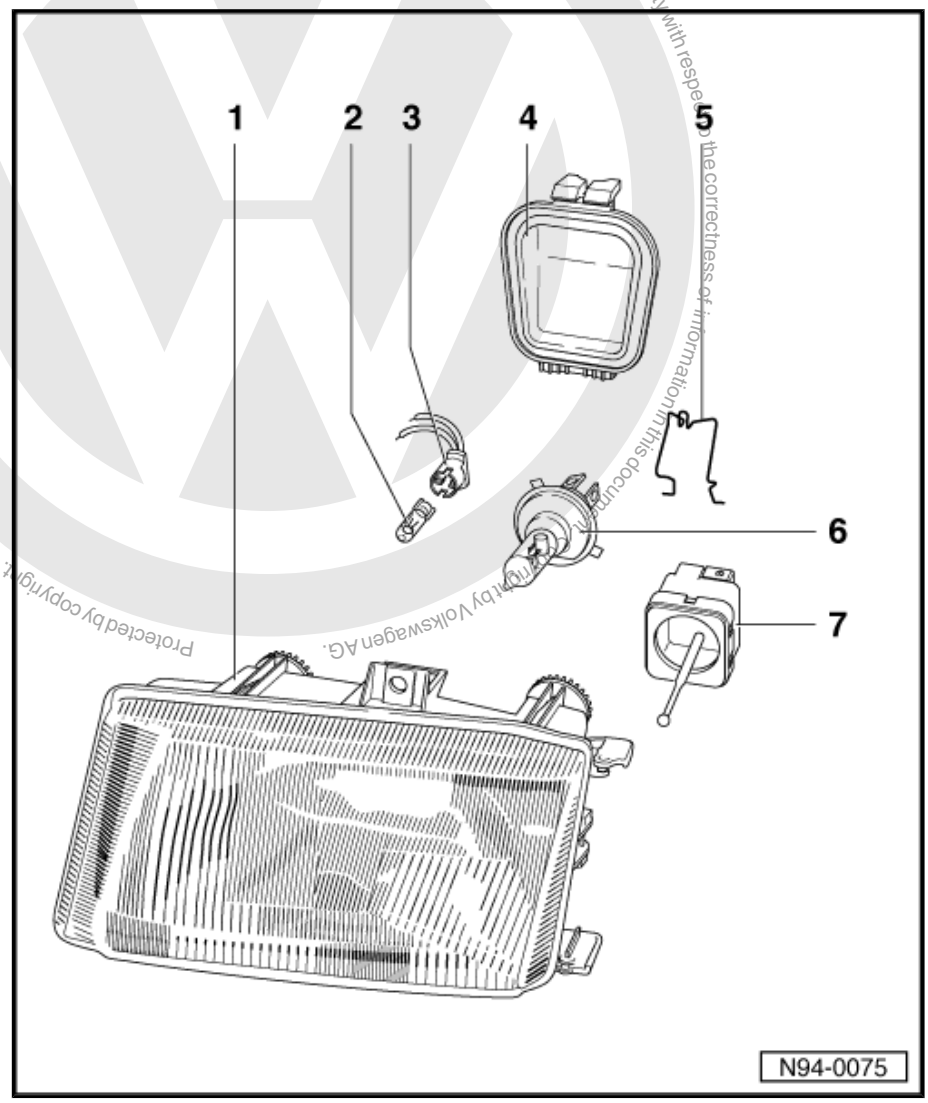

Protected by copyright. Copying for private or commercial purposes, in part or in whole, is not permitted unless authorised by Volkswagen AG. Volkswagen AG does not guarantee or accept any liability with respect to the correctness of information in this document. Copyright by Volkswagen AG.
satelettronica

1.2 Adjusting headlights

Note

Use a headlight adjustment unit when adjusting headlights. Specifications ⇒ Maintenance ; Booklet 29 .

Headlight (left):

A - Lateral adjustment

B - Height adjustment

– Adjust headlight, through holes -A- and -B-, using a suitable cross slotted screwdriver.

Both adjustment screws on right-hand headlight are a mirror image.

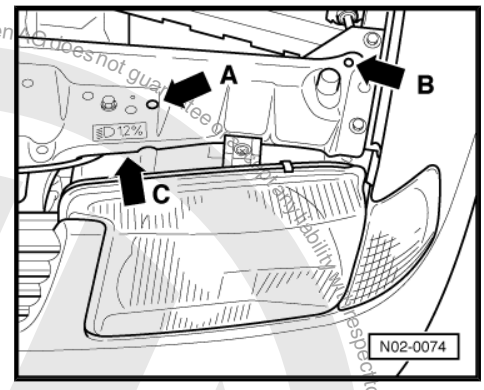

Note

Please check also that both headlights move evenly when operating the headlight range control.

1.3 Removing and installing headlight

Removing:

– Remove radiator grille and radiator grille trim.

– Disconnect headlight and turn signal multi-pin connector.

– Remove securing bolts -arrows-.

– Pull headlight housing out forwards.

Installing:

Installation is carried out in the reverse sequence.

– Check headlight settings ⇒ page 90 .

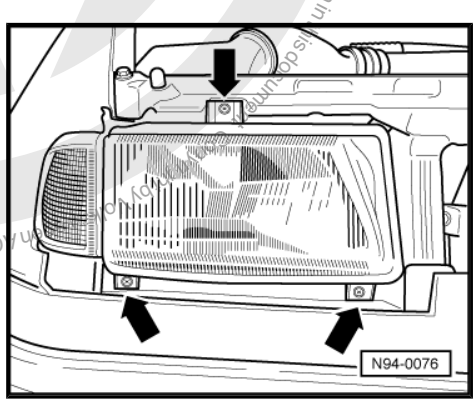

1.4 Replacing headlight bulb

Note

Do not touch bulb glass when fitting a new bulb. Fingers leave traces of grease on the glass, which evaporate when the bulb is switched on and cause the glass to cloud over.

1.4.1 Replacing side light bulb

– Release sealing cover on rear of headlight housing and remove.

Protected by copyright. Copying for private or commercial purposes, in part or in whole, is not permitted unless authorised by Volkswagen AG. Volkswagen AG does not guarantee or accept any liability with respect to the correctness of information in this document. © Copyright by Volkswagen AG.
satelettronica

– Pull holder -4- with bulb on connector out from reflector.
– After changing bulb, push bulb with holder into reflector to stop.
– Install cover on rear of headlight housing.
– Check function of headlight after installing a new bulb.

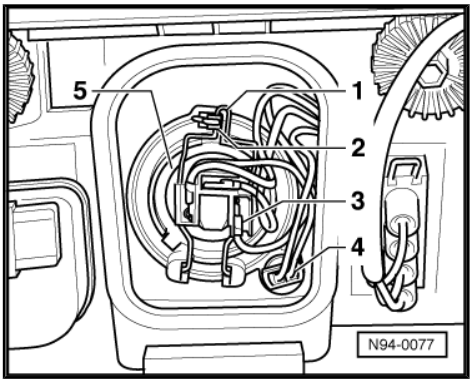

1.4.2 Renewing dipped beam and main beam bulb

– Release sealing cover on rear of headlight housing and remove.
– Pull connector -3- off twin-filament bulb.
– Unclip spring retaining clip -1- from retaining lug -2- and move clip downwards.
– Pull twin-filament bulb -5- out of reflector.
– Do not touch bulb glass when installing.
– Insert new bulb so that the lugs on the disc plate align with the recesses in the reflector.
– Install cover on rear of headlight housing.
– Check function of headlight after installing a new bulb.

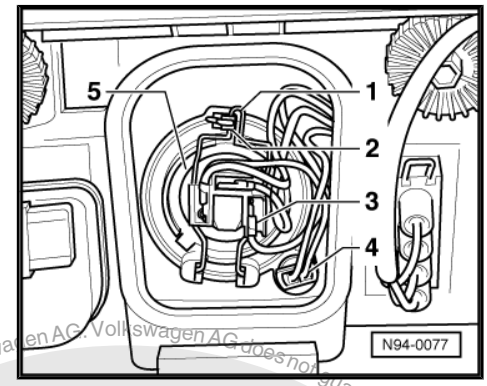

1.5 Removing and installing headlight range control motor

Note

- *The control motor can only be removed and installed when the headlight housing has been removed.*
- *If control motors are removed and installed or renewed, always carry out the headlight basic setting with a beam setting appliance. Inclination dimension is embossed on headlight housing.*

Removing:

– Remove headlight ⇒ page 90 .
– Release sealing cover on rear of headlight housing and remove.
– Disconnect headlight range control motor connector.

satelettronica
Protected by copyright. Copying for private or commercial purposes, in part or in whole is not permitted unless authorised by Volkswagen AG. Volkswagen AG does not guarantee or accept any liability with respect to the correctness of information in this document. Copyright by Volkswagen AG.

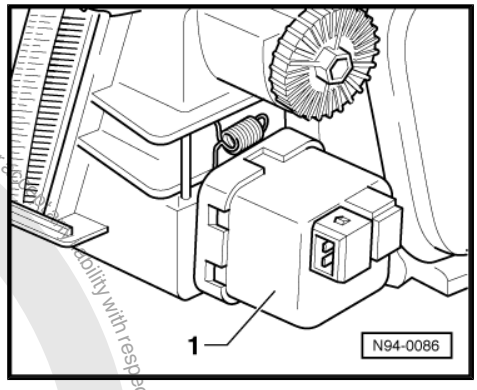

– Release left-hand headlight control motor -1- by turning to left and right-hand control motor by turning to right.
– Pull positioning shaft ball head forcefully out of locking device in reflector.

Installing:

– Push control motor into the ball head socket on reflector until locating shaft engages with reflector.
– Lock control motor in position by turning.
– Fit sealing cap.
– Install headlight ⇒ page 90 .
– Check headlight settings ⇒ page 90 .

Protected by copyright. Copying for private or commercial purposes, in part or in whole, is not permitted unless authorised by Volkswagen AG. Volkswagen AG does not guarantee or assume any liability with respect to the correctness of information in this document. Copyright by Volkswagen AG.

satelettronica

2 Front fog lights

2.1 Removing and installing fog light

Removing:

– Remove cover ⇒ General body repairs, exterior; Rep. Gr. 63 ; Front bumper - Assembly overview .

– Remove securing bolts -arrows-.

– Pull fog light housing out to rear of bumper and disconnect connector.

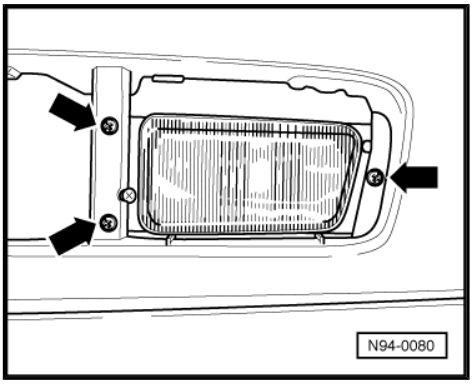

Installing:

Installation is carried out in the reverse sequence.

– Check fog light settings ⇒ Maintenance ; Booklet 29 .

2.2 Removing and installing fog light bulb

Note

Do not touch bulb glass when fitting a new bulb. Fingers leave traces of grease on the glass, which evaporate when the bulb is switched on and cause the glass to cloud over.

Removing:

– Remove securing bolts -arrows- and remove cover cap -1-.

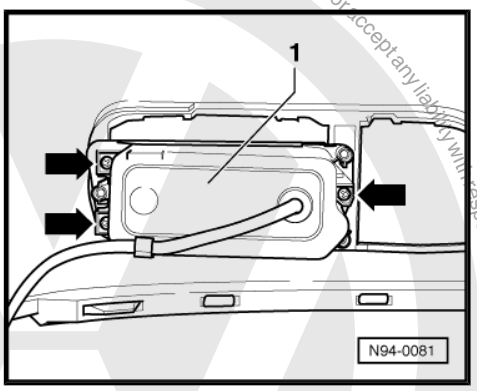

– Disconnect connector -1- of H3 halogen bulb (12 V/55 W) in the cover cap.

– Press spring retaining clip -2- over retaining lug and swing out.

– Pull bulb out of housing.

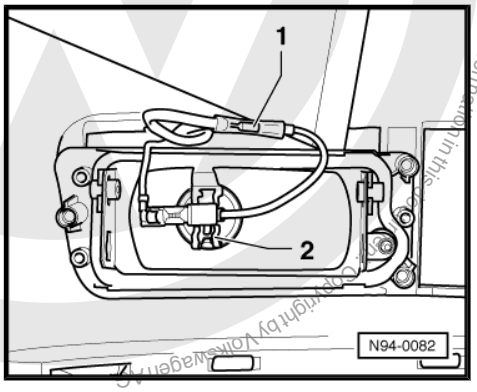

Installing:

Installation is carried out in the reverse order. When installing observe the following:

– Insert bulb so that the recess in the bulb holder aligns with guide lug of housing.

– Check fog light settings after installing a new bulb ⇒ Maintenance ; Booklet 29 .

Protected by copyright. Copyright by Volkswagen AG. Volkswagen AG does not guarantee or accept any liability with respect to the correctness of information in this copy, in part or in whole, is not permitted unless authorised by Volkswagen AG. Volkswagen AG does not guarantee or accept any liability with respect to the correctness of information in this copy, in part or in whole, is not permitted unless authorised by Volkswagen AG.
satelettronica

3 Front turn signals

3.1 Removing and installing front turn signal

Removing:

– Push locking lugs -arrows- outwards.

– Pull turn signal out forwards.

– Disconnect connector.

Installing:

– Reconnect connector.

– Slide turn signal into the wing aperture until it locates.

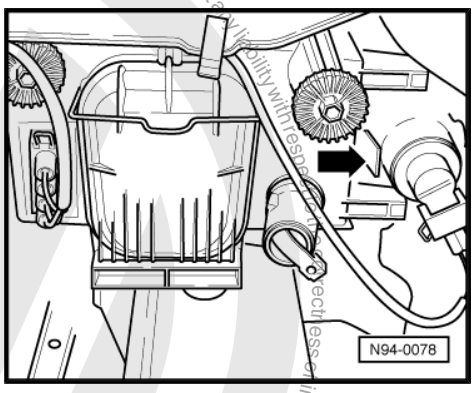

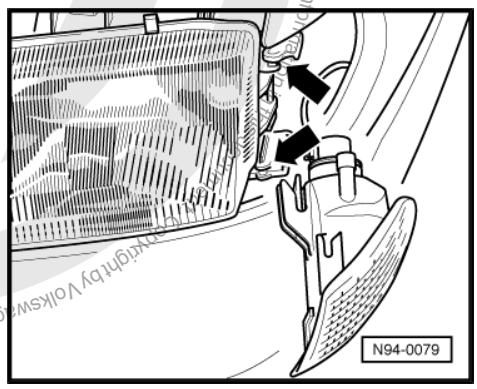

Note

The lugs on the turn signal must locate in the guides -arrows- of the headlight housing.

3.2 Removing and installing turn signal bulb

Removing:

– Turn bulb holder in direction of arrow and pull out from housing.

– Remove bulb from holder.

Installing:

Installation is carried out in the reverse sequence.

Note

Do not touch bulb glass when fitting a new bulb. Fingers leave traces of grease on the glass, which evaporate when the bulb is switched on and cause the glass to cloud over.

When installing, ensure that the bulb holder engages in the housing by turning in opposite direction to -direction of arrow-.

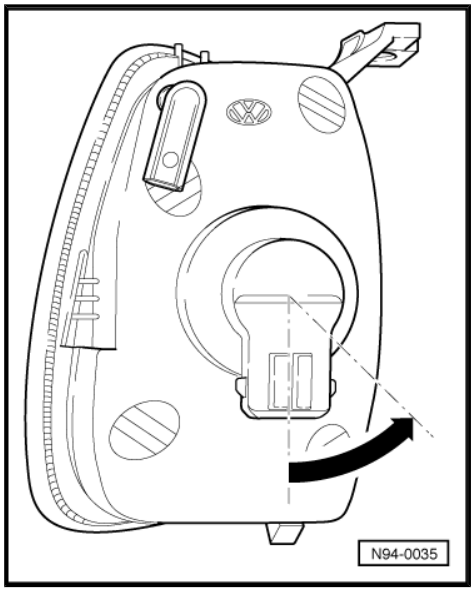

Protected by copyright. Copying for private or commercial purposes, in part or in whole, is not permitted unless authorised by Volkswagen AG. Volkswagen AG does not guarantee or accept any liability with respect to correctness of information.
Copyright by Volkswagen AG.
satelettronica

4 Side mounted repeater turn signals

4.1 Removing and installing side mounted repeater turn signal

Removing:

Note

Extreme caution must be exercised when removing the side mounted repeater turn signal as removing is only possible in one direction ,and when installed it is not possible to recognise on which side of the turn signal the spring clip or the mounting is located. When using force to remove the light on the spring clip side there is a great danger that the turn signal or the vehicle paintwork surface will be damaged.

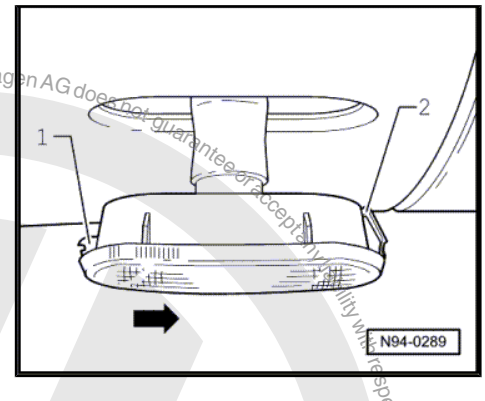

- Press turn signal with a suitable tool on the mounting side -1- carefully in direction of arrow against the force of the spring clip -2- on the opposite side, and remove (protect paintwork surface with adhesive tape first if necessary).
- Pull rubber holder with push-fit bulb off bulb housing.
- Pull push-fit bulb (12 V/5 W) out of socket (do not turn).

Installing:

- Fit rubber holder with push-fit bulb onto bulb housing.
- Insert turn signal in wing.
- After installing a new bulb check function of turn signals.

Protected by copyright. Copying for private or commercial purposes, in part or in whole, is not permitted unless authorised by Volkswagen AG. Volkswagen AG does not guarantee or accept any liability with respect to the correctness of information in this document. Copyright by Volkswagen AG.
satelettronica

5 Tail lights

5.1 Assembly overview - tail light (Caddy)

WARNING

Always disconnect the battery earth strap before working on the electrical system.

1 - Housing

2 - M5 hexagon nut

3 - Rear fog light bulb

12 V/21 W.

- ❑ For right-hand tail lights, reversing light bulb 12 V / 21 W

4 - Bulb holder

- ❑ Removing ⇒ page 98

5 - Turn signal bulb

12 V/21 W.

6 - Tail light bulb

12 V/5 W.

7 - Brake light bulb

12 V/21 W.

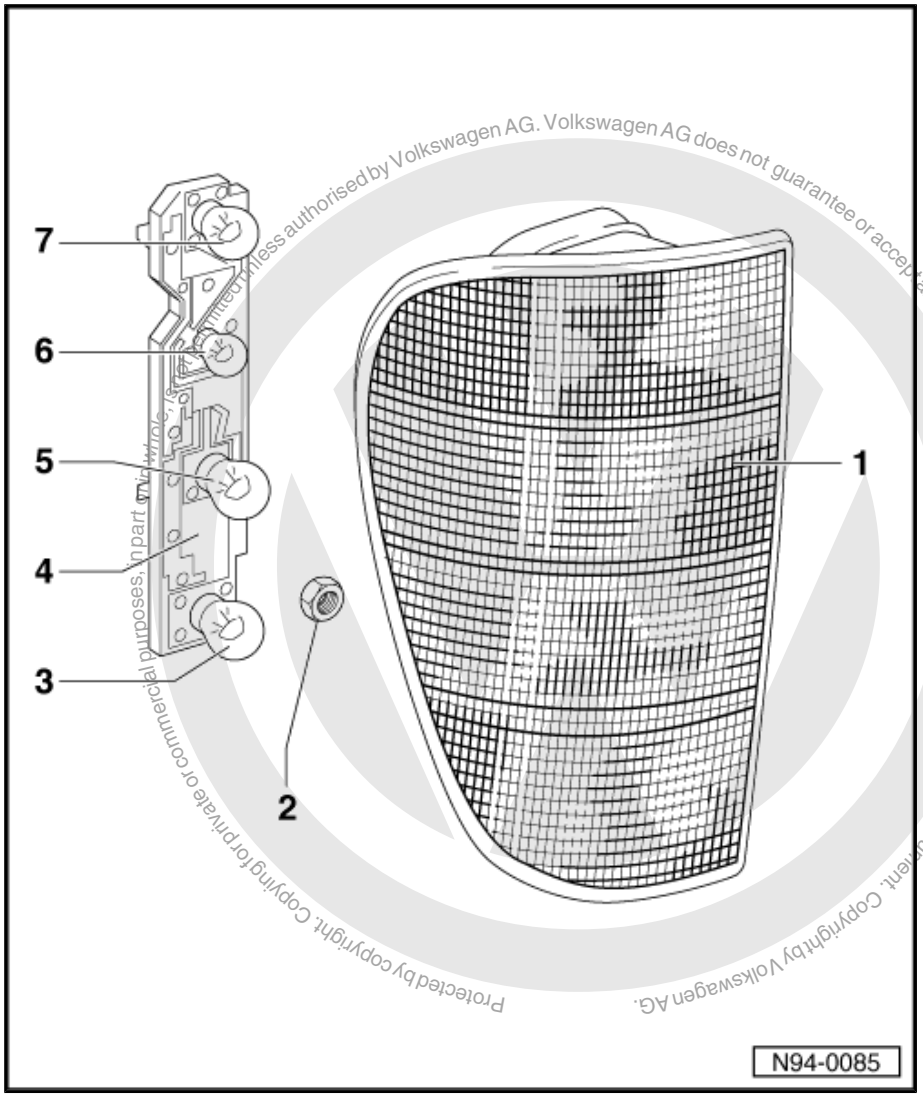

Protected by copyright. Copying for private or commercial purposes, in part or in whole, is not permitted unless authorised by Volkswagen AG. Volkswagen AG does not guarantee or accept any liability with respect to the correctness of information in this document. Copyright by Volkswagen AG.
satelettronica

5.2 Assembly overview - tail light (Polo Classic)

WARNING

Always disconnect the battery earth strap before working on the electrical system.

1 - Housing

2 - Rear fog light bulb

12 V/21 W.

- ❑ For right-hand tail lights, reversing light bulb 12 V / 21 W

3 - Tail light bulb

12 V/5 W.

4 - Brake light bulb

12 V/21 W.

5 - Turn signal bulb

12 V/21 W.

6 - Bulb holder

- ❑ Removing ⇒ page 99

7 - Seal

8 - M5 hexagon nuts

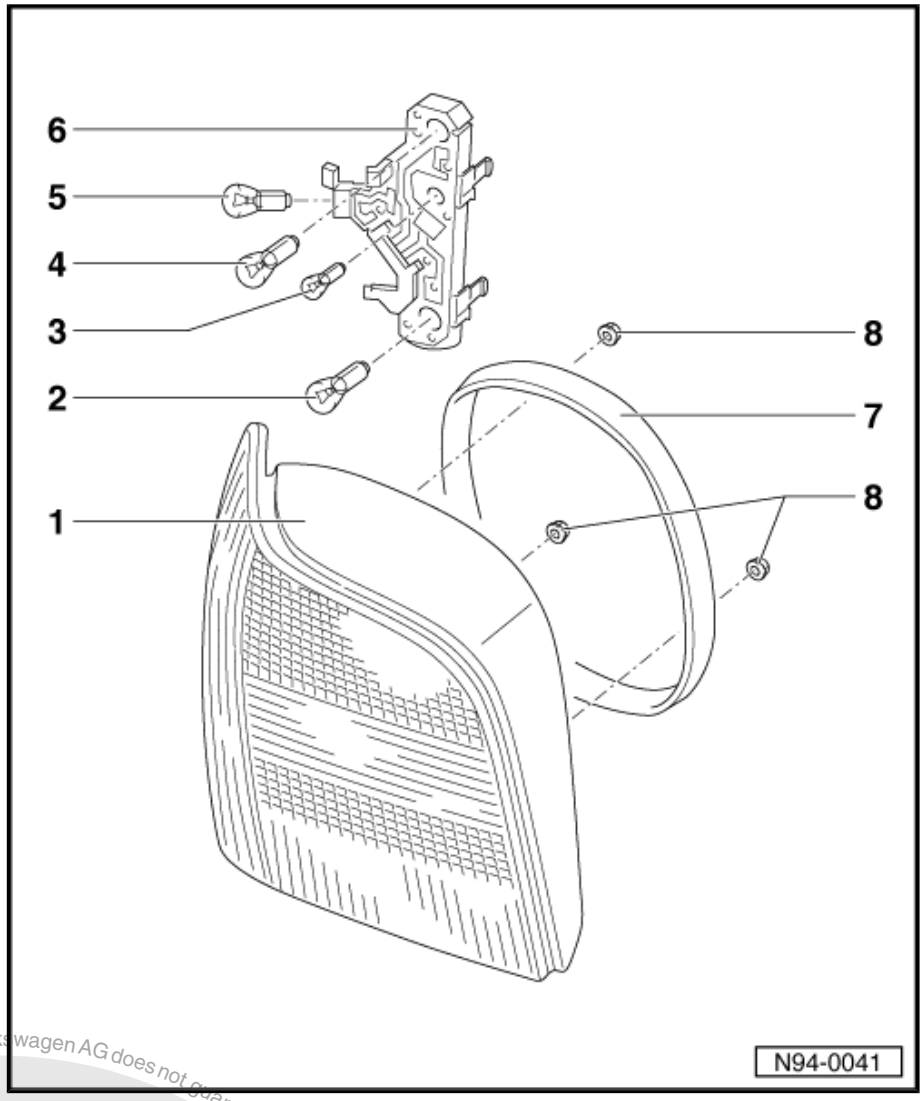

5.3 Assembly overview - tail light (Polo Variant)

WARNING

Always disconnect the battery earth strap before working on the electrical system.

satelettronica

Protected by copyright. Copying for private or commercial purposes, in part or in whole, is not permitted unless authorised by Volkswagen AG. Volkswagen AG does not guarantee or accept any liability with respect to the correctness of information in this document. Copyright by Volkswagen AG.

1 - Housing

2 - M5 hexagon nuts

3 - Rear fog light bulb

- ❑ Vacant on right-hand tail light

4 - Bulb holder

- ❑ Removing ⇒ page 99

5 - Tail light bulb

12 V/5 W.

6 - Twin-filament bulb for brake and tail light

12 V/21 W/5 W

7 - Reversing light bulb

12 V/21 W.

8 - Turn signal bulb

12 V/21 W.

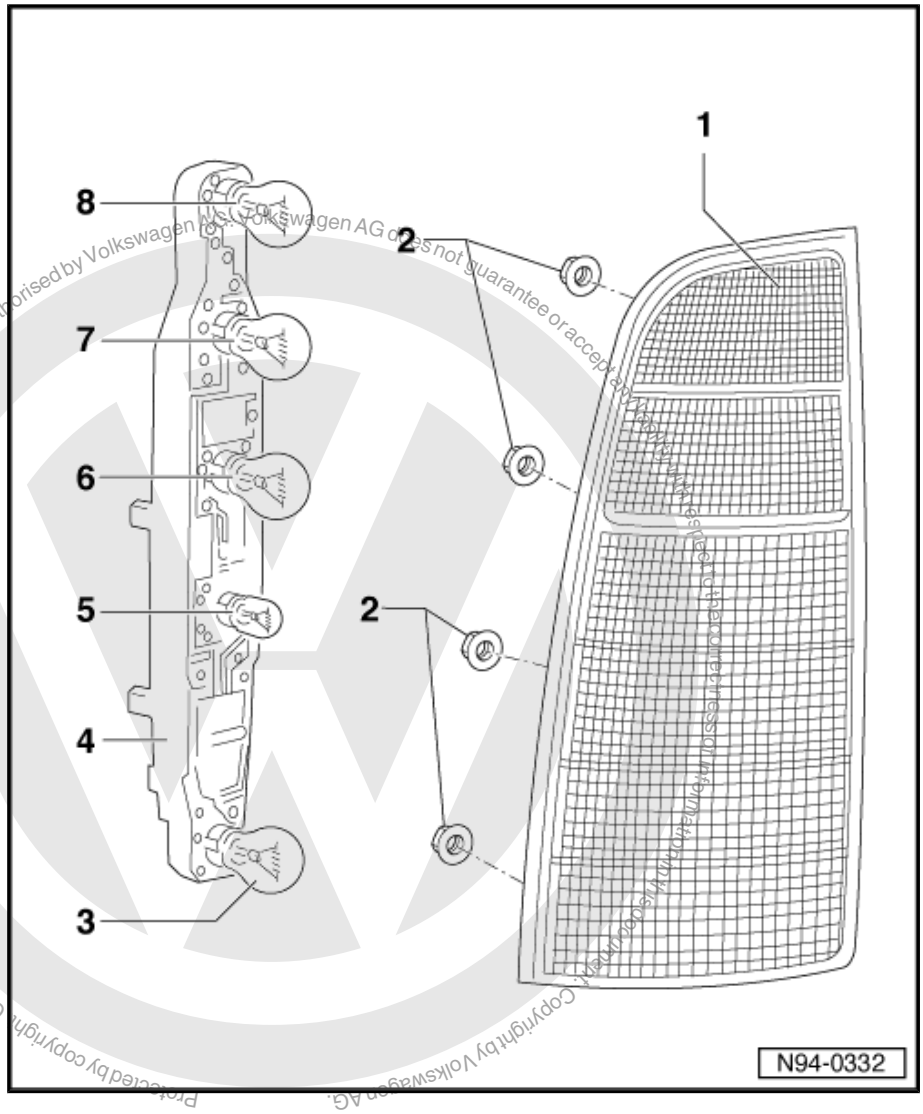

Protected by copyright. Copyright by Volkswagen AG. Copying for private or commercial purposes, in part or in whole, is not permitted unless authorised by Volkswagen AG. Volkswagen AG does not guarantee or accept any liability with respect to the correctness and completeness of this document.

5.4 Removing and installing tail light bulb holder (Caddy)

Removing:

– Release retaining lugs -arrows- and take out bulb holder.

– Disconnect connector.

Installing:

Install in reverse order of removal.

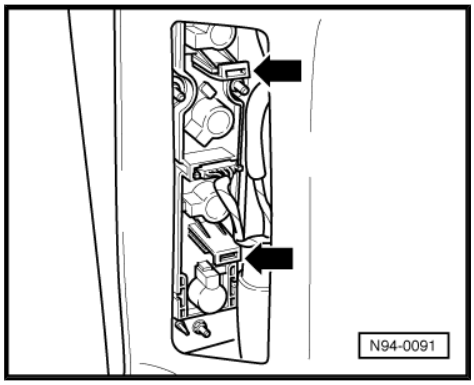

satelettronica

5.5 Removing and installing tail light bulb holder (Polo Variant)

Removing:

– Release retaining lugs -arrows- and take out bulb holder.

– Disconnect connector.

Installing:

Install in reverse order of removal.

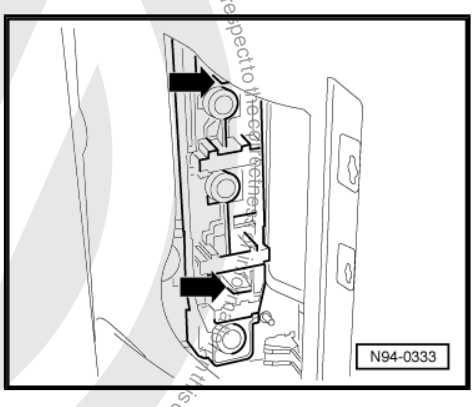

5.6 Removing and installing tail light bulb holder (Polo Classic)

Removing:

– Release retaining lugs -arrows- and take out bulb holder.

– Disconnect connector.

Installing:

Install in reverse order of removal.

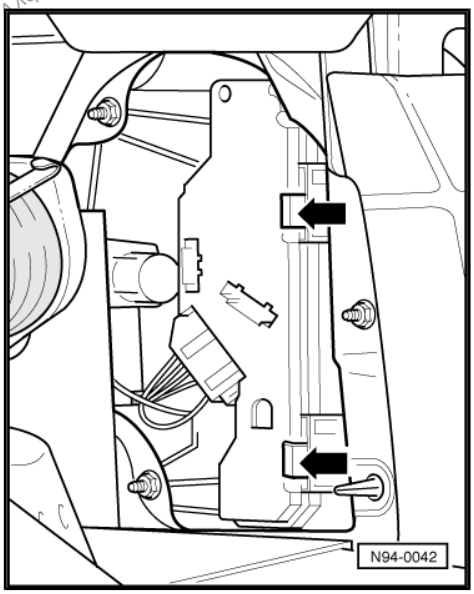

Protected by copyright. Copyright by Volkswagen AG.
Copyright by Volkswagen AG. Volkswagen AG does not guarantee or accept any liability with respect to the correctness of this document.
Reproduced or published in whole or in part for commercial purposes, in any form or by any means, is not permitted unless authorised by Volkswagen AG.
satelettronica

6 Additional brake lights

6.1 Additional brake light (Polo Classic)

Note

The additional brake light is located on the rear window.

6.1.1 Removing and installing bulb holder

Removing:

– Pull off connector, press back retaining spring and remove bulb holder.

Installing:

Install in reverse order of removal.

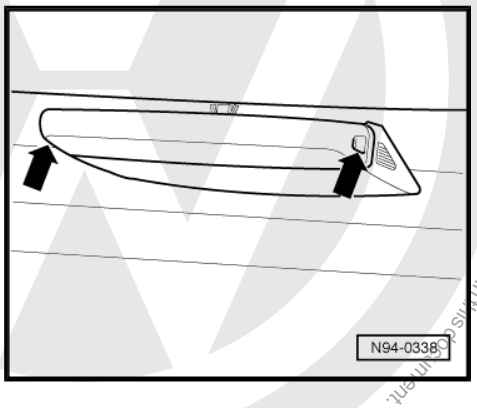

6.1.2 Changing bulbs

– Remove bulb holder ⇒ page 100 .

– The bulbs (12 V/5 W) -2- are a push fit. They can be pulled out of and pushed into the bulb holder -1-.

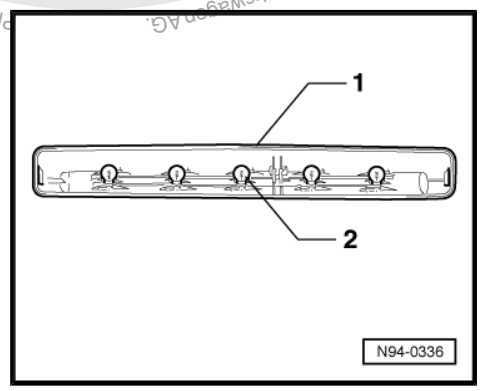

6.1.3 Removing and installing additional brake light housing

Removing:

– Remove bulb holder ⇒ page 100 .

Protected by copyright. Copying for private or commercial purposes, in part or in whole, is not permitted unless authorised by Volkswagen AG. Volkswagen AG does not guarantee or accept any liability with respect to the correctness of information in this document. Copyright by Volkswagen AG.
satelettronica

– Press back retaining springs -arrows- and take housing with lens off rear window.

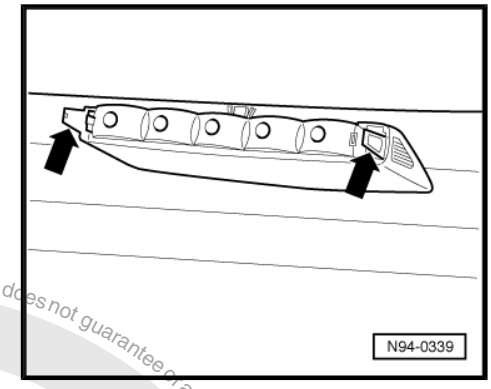

Installing:

Install in reverse order of removal.

6.2 Additional brake light (Polo Variant)

Note

The additional brake light is secured to the rear lid.

6.2.1 Removing and installing bulb holder

Removing:

– Unclip lower half of additional brake light housing downwards -arrows- and fold away.

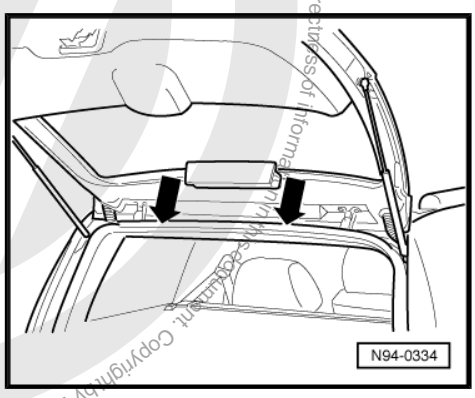

– Pull off connector and unclip bulb holder to rear -arrows-.

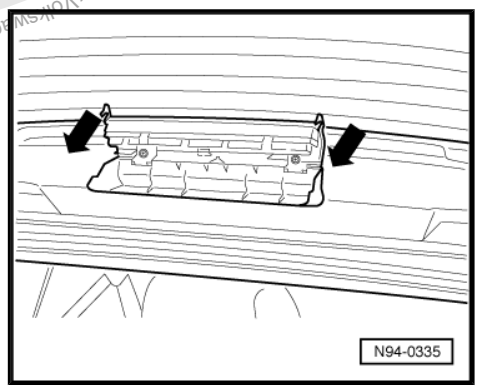

Note

On the bulb holder there is a circuit board with 10 soldered bulbs which are covered by a plastic strip. Changing an individual bulb is not possible, the bulb holder must be renewed complete in cases of repair.

Installing:

Install in reverse order of removal.

6.2.2 Removing and installing additional brake light housing

Removing:

– Remove bulb holder ⇒ page 101 .

Protected by copyright. Copying for private or commercial purposes, in part or in whole, is not permitted unless authorised by Volkswagen AG. Volkswagen AG does not guarantee or accept any liability with respect to the correctness of information in this document. Copyright by Volkswagen AG.
satelettronica

– Unscrew securing screws -arrows- and remove additional brake light.

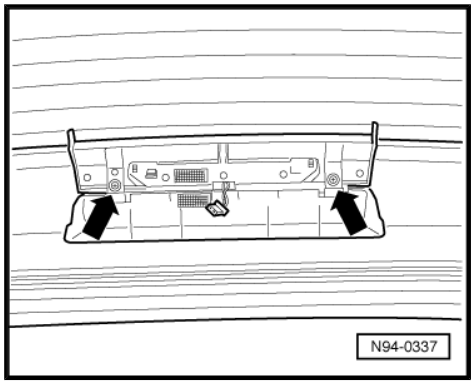

Installing:

Install in reverse order of removal.

Protected by copyright. Copying for private or commercial purposes, in part or in whole, is not permitted unless authorised by Volkswagen AG. Volkswagen AG does not guarantee or accept any liability with respect to the correctness of information in this document. Copyright by Volkswagen AG.

satelettronica

7 Number plate lights

7.1 Number plate light (Polo Classic)

7.1.1 Removing and installing number plate light

Removing:

– Remove securing screws -arrows- for number plate light.
– Pull number plate light out.
– Disconnect connector.

Installing:

Install in reverse order of removal.

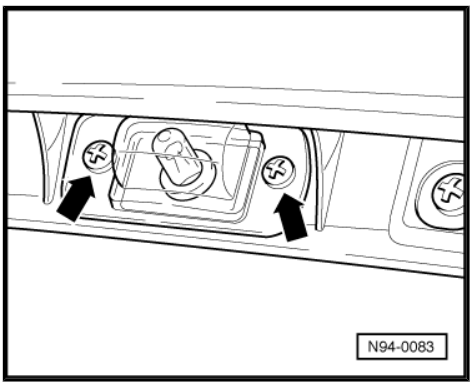

7.1.2 Removing and installing number plate light bulb

Removing:

– Remove number plate light ⇒ page 103 .
– Pull out glass base bulb (12 V/5 W) -arrow-, do not turn.

Installing:

– Push in new bulb, fit cover and tighten securing screws.

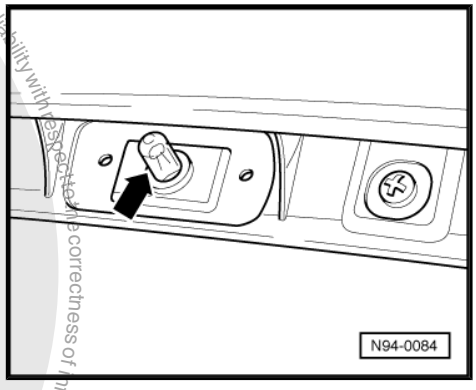

Protected by copyright. Copying for private or commercial purposes, in part or in whole, is not permitted unless authorised by Volkswagen AG. Volkswagen AG does not guarantee or accept any liability with respect to the correctness of information in this document. Copyright by Volkswagen AG.
satelettronica

7.2 Number plate light (Caddy)

7.2.1 Removing and installing number plate light

Removing:

– Remove securing screw -arrow- for number plate light.

– Pull number plate light out.

– Disconnect connector.

Installing:

Install in reverse order of removal.

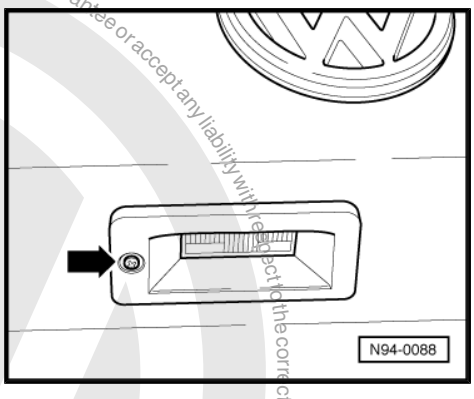

7.2.2 Removing and installing number plate light bulb

Removing:

– Remove number plate light ⇒ page 104 .

– Pull cover -3- off housing -1-.

– Pull out glass base bulb (12 V/5 W) -2-, do not turn.

Installing:

– Push in new bulb, fit cover and tighten securing screw.

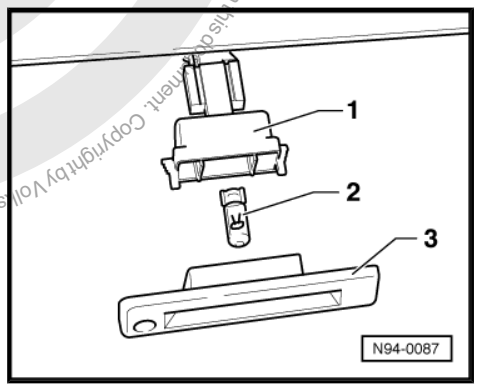

7.3 Number plate light (Polo Variant)

7.3.1 Removing and installing number plate light

Removing:

– Remove securing screws -arrows- for number plate light.

– Pull number plate light out.

– Disconnect connector.

Installing:

Install in reverse order of removal.

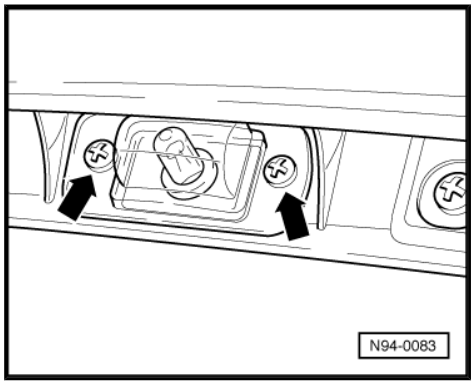

Protected by copyright. Copying for private or commercial purposes, in part or in whole, is not permitted unless authorised by Volkswagen AG. Volkswagen AG does not guarantee or accept any liability with respect to the correctness of information in this document. Copyright by Volkswagen AG.
satelettronica

7.3.2 Removing and installing number plate light bulb

Removing:

– Remove number plate light ⇒ page 104 .

– Pull out glass base bulb (12 V/5 W) -arrow-, do not turn.

Installing:

– Push in new bulb, fit cover and tighten securing screws.

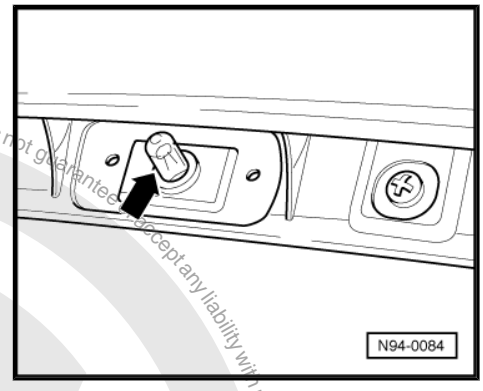

© Volkswagen AG does not guarantee or accept any liability with respect to the correctness of information in this document. Copyright by Volkswagen AG.
Protected by copyright. Copying for private or commercial purposes, in part or in whole, is not permitted unless authorised by Volkswagen AG.
satelettronica

8 Steering column switch and ignition and starter switch

8.1 Assembly overview - steering column

WARNING

Always disconnect the battery earth strap before working on the electrical system.

Note

- *Further information for working on steering column ⇒ Running gear, axles, steering; Rep. Gr. 48 ; Steering column, column tube, steering wheel and steering wheel with airbag > 09.99 .*
- *Instructions for working on vehicles fitted with an airbag ⇒ General body repairs, interior; Rep. Gr. 69 ; Airbag .*

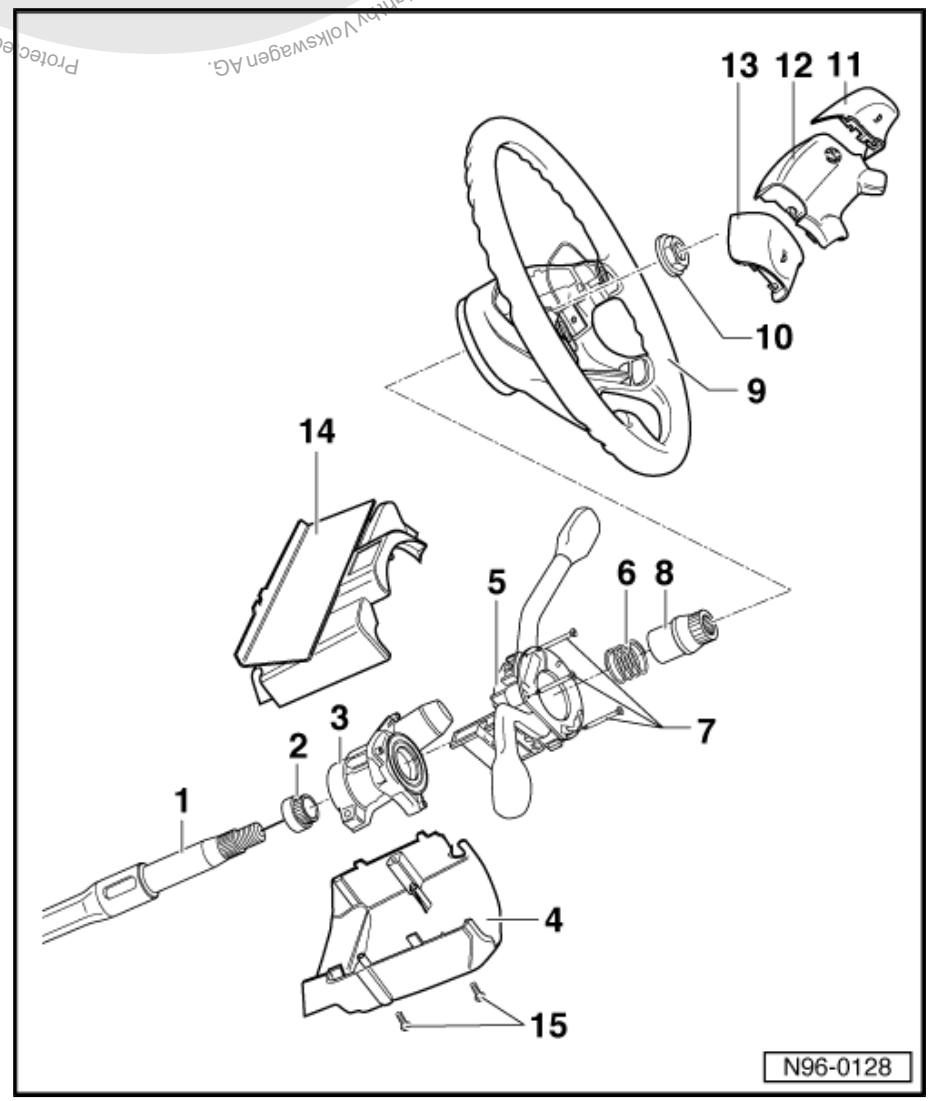

1 - Steering column

2 - Support ring

3 - Steering column lock housing

- ❑ Removing and installing ⇒ page 110
- ❑ Removing and installing lock cylinder ⇒ page 113

4 - Trim - lower part

5 - Steering column switch

- ❑ For turn signals, main and dipped beam, headlight flasher, parking lights, windscreen wiper wash/wipe control and rear window wiper
- ❑ Removing and installing ⇒ page 107

6 - Spring

7 - Steering column switch securing screws

8 - Multi-point adapter sleeve

9 - Steering wheel

- ❑ Grease slip ring for horn operation ⇒ page 107

10 - Hexagon nut

- ❑ 50 Nm

11 - Cover cap for right horn plate

- ❑ Removing cover cap

satelettronica

⇒ page 107

12 - Airbag unit

- ❑ Removing and installing ⇒ General body repairs, interior; Rep. Gr. 69 ; Airbag .

13 - Cover cap for left horn plate

- ❑ Removing cover cap ⇒ page 107

14 - Trim - upper part

15 - Securing screws for trim upper and lower parts

Protected by copyright. Copying for private or commercial purposes, in part or in whole, is not permitted unless authorised by Volkswagen AG. Volkswagen AG does not guarantee or accept any liability with respect to the correctness of information in this document. Copyright by Volkswagen AG.

Removing and installing horn plates with airbag unit

1 - Horn plates

2 - Contact discs

3 - Wiring connector

4 - Springs

Airbag unit must be removed to gain access to the wiring connector ⇒ General body repairs, interior; Rep. Gr. 69 ; Airbag .

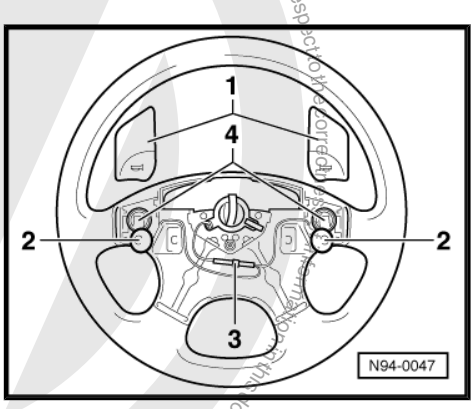

Removing and installing horn plates with no airbag unit

– Lift up lower side of cover with button -arrow- and pull off of steering wheel.

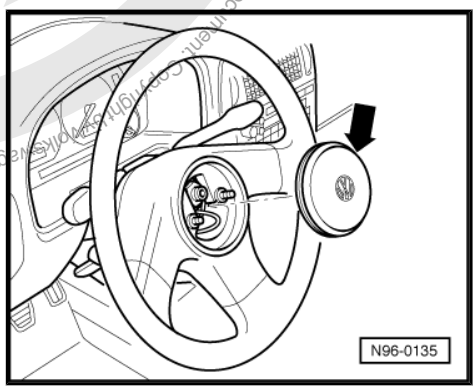

Slip ring for horn operation

– Lubricate slip ring -arrow- with G 000 400 grease.

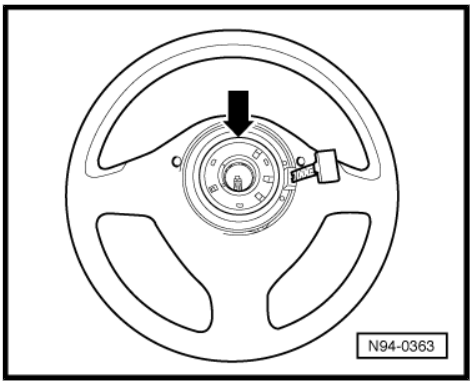

8.2 Removing and installing steering column switch

Special tools and workshop equipment required

satelettronica

- Torque wrench -V.A.G 1331-

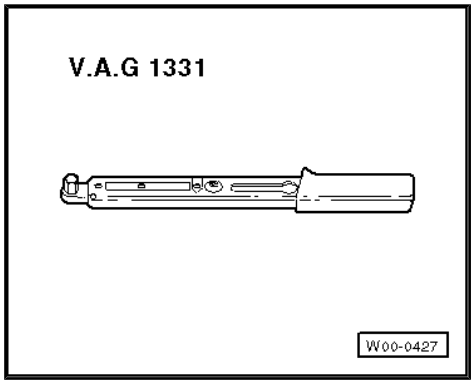

WARNING

Before working on the electrical system disconnect the battery earth strap.

Note

- *If vehicle has a security-coded radio, obtain anti-theft code before disconnecting battery.*
- *When the battery is reconnected, check the vehicle equipment (radio, clock, electrically operated windows) as per Workshop Manual and/or the Owner's Manual.*

Removing:

– Remove driver side airbag ⇒ General body repairs, interior; Rep. Gr. 69 ; Airbag .

– Remove steering column switch lower trim.

– Detach connector -arrow- from canceling unit.

– Pull connector off steering lock housing.

– Remove hexagon nut, ensure steering wheel is in central position (wheels in straight ahead position) and pull steering wheel off steering column.

– Remove steering column switch upper trim.

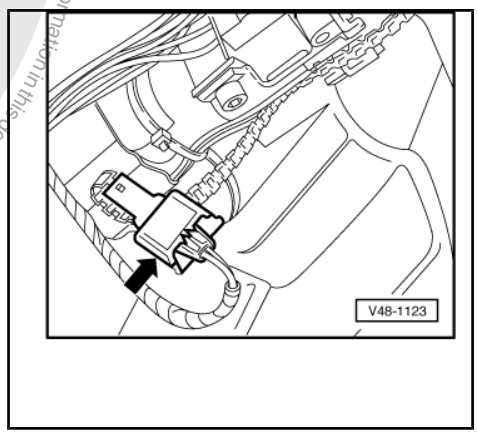

Protected by copyright. Copyright by Volkswagen AG.
Copyright by Volkswagen AG. Volkswagen AG does not guarantee or accept any liability with respect to the correctness of information in this document.
Commercial purposes, in part or in whole, is permitted unless authorised by Volkswagen AG.
satelettronica

– Remove securing bolts -arrows-.

– Disconnect connectors for turn signal and windscreen wiper switch.

– Pull off turn signal and windscreen wiper switch from steering column.

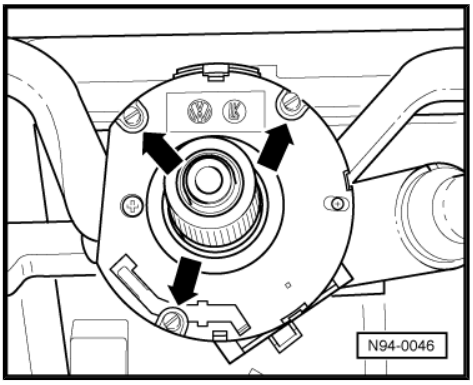

Installing:

Install in reverse order of removal.

– Install driver side airbag ⇒ General body repairs, interior; Rep. Gr. 69 ; Airbag .

8.3 Pin assignment on steering column switch

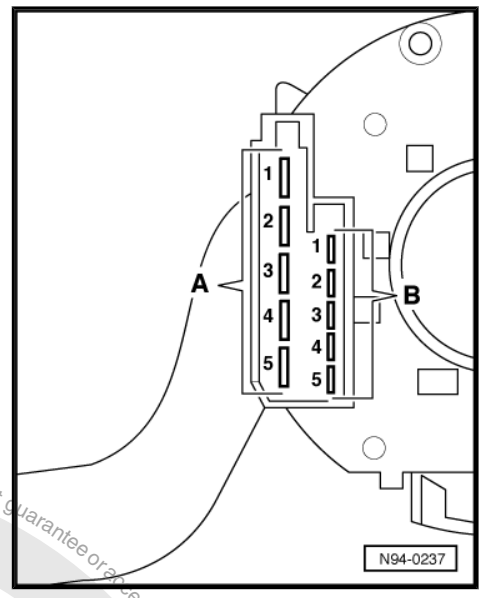

5-pin connector -A-

1 - Not assigned

2 - Switch for dip beam/headlight flasher - terminal 56b

3 - Switch for dip beam and headlight flasher - terminal 56

4 - Switch for dip beam/headlight flasher - terminal 56a

5 - Switch for dip beam and headlight flasher - terminal 30

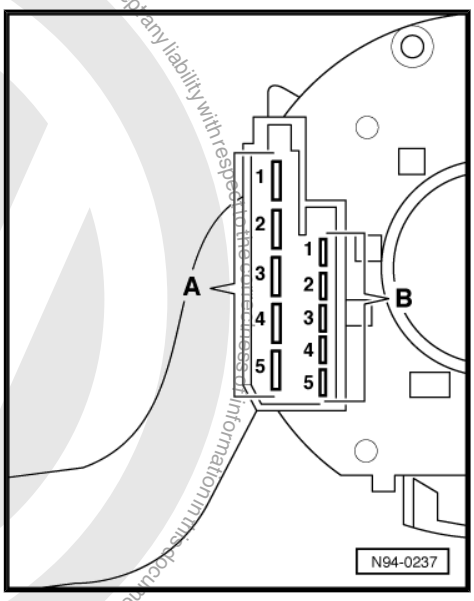

5-pin connector -B-

1 - Windscreen wiper switch - terminal 53b

2 - Windscreen wiper switch - terminal 53a

3 - Windscreen wiper switch - terminal 53

4 - Windscreen wiper switch - terminal 53e

5 - Windscreen wiper switch - intermittent operation

Protected by copyright. Copying for private or commercial purposes, in part or in whole, is not permitted unless authorised by Volkswagen AG. Volkswagen AG does not guarantee or accept any liability with respect to the correctness of information in this document. Copyright by Volkswagen AG.
satelettronica

7-pin connector -C-

1 - Horn plate - terminal 71
2 - Turn signal switch - terminal 49a
3 - Turn signal switch - terminal L
4 - Parking light switch - terminal PL
5 - Parking light switch - terminal P
6 - Parking light switch - terminal PR
7 - Turn signal switch - terminal R

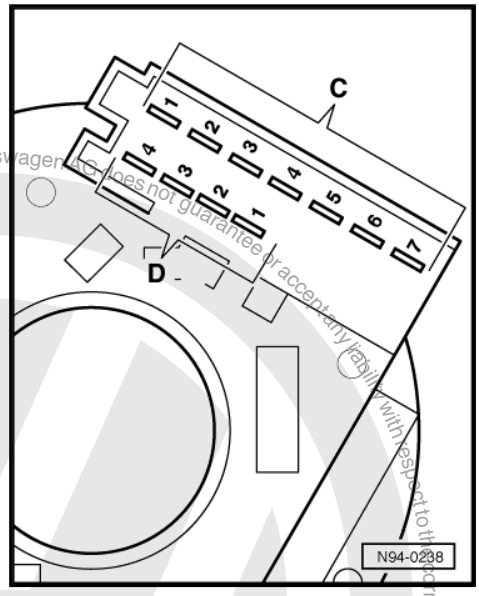

4-pin connector -D-

1 - Windscreen wiper switch - rear window wiper
2 - Windscreen wiper switch - flick wipe
3 - Windscreen wiper switch - terminal 31
4 - Windscreen wiper switch - terminal 15, not used

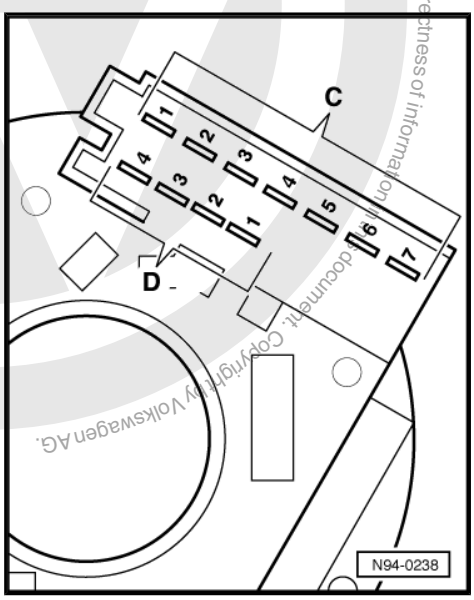

Protected by copyright. Copying for private or commercial purposes, in part or in whole, is not permitted unless authorised by Volkswagen AG. Volkswagen AG does not guarantee or accept any liability with respect to the correctness of information in this document. Copyright by Volkswagen AG.

satelettronica

8.4 Removing and installing steering lock housing

Special tools and workshop equipment required

- Tube -VW 420-

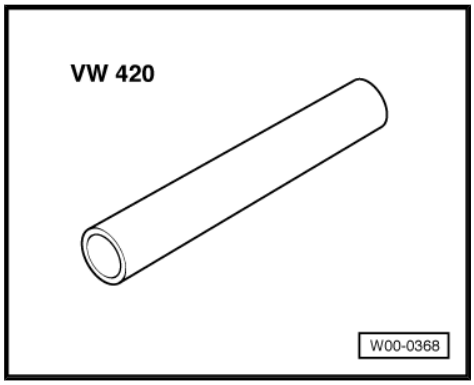

- Puller (e.g. Kukko 204/2)

WARNING

Before working on the electrical system disconnect the battery earth strap.

Note

- *If vehicle has a security-coded radio, obtain anti-theft code before disconnecting battery.*
- *When the battery is reconnected, check the vehicle equipment (radio, clock, electrically operated windows) as per Workshop Manual and/or the Owner's Manual.*

Removing:

– Remove steering column switches ⇒ page 107 .

Vehicles with removable immobilizer reader coil:

– Detach reader coil -arrow- from steering lock housing.

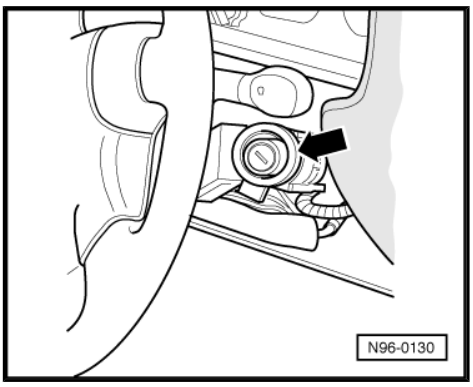

Vehicles with an immobilizer reader coil which is permanently secured to the lock cylinder:

– Press storage compartment lugs together in direction of arrow.

– Fold storage compartment down and pull out to rear.

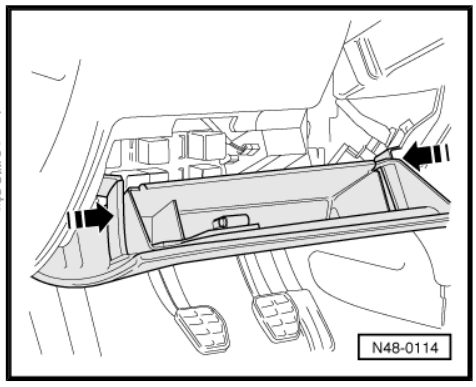

– Carefully pull immobilizer reader coil connector -arrow- off immobilizer control unit.

– Remove reader coil cable from cable guide -1-.

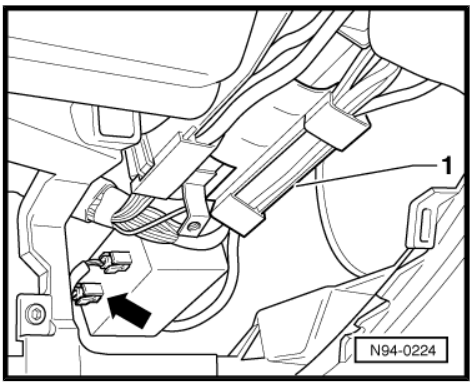

Continuation for all vehicles:

– Pull multi-pin connector off ignition and starter switch.

Vehicles with automatic gearbox:

Protected by copyright. Copyright by Volkswagen AG. Copying for private or commercial purposes, in part or in whole, is not permitted unless authorised by Volkswagen AG. Volkswagen AG does not guarantee or accept any liability with respect to the correctness of information in this document.

satelettronica

– Pull clip off and unclip locking cable for ignition key removal lock.

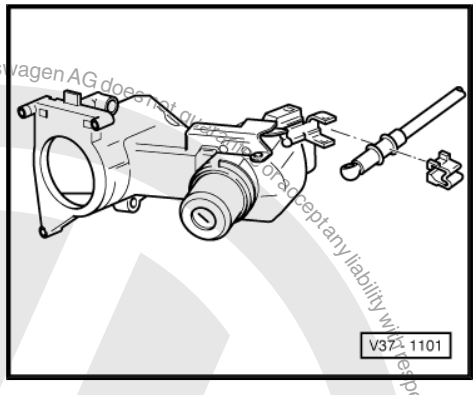

Continuation for all vehicles:

– Drill out shear-head bolt -1- or chisel off if necessary.

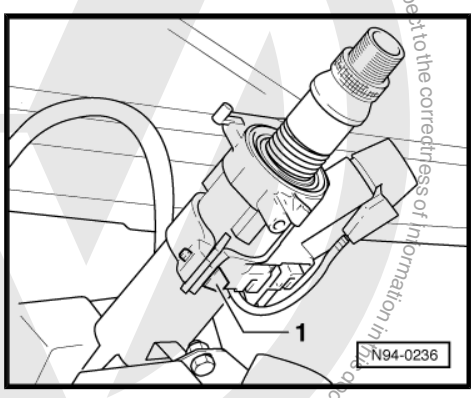

> ⚠ **WARNING**
>
> *Wear eye protection.*

– Pull off multi-point adapter sleeve with commercially available puller -1- (e.g. Kukko 204/2).

– Pull steering lock housing and spring off column tube and steering column.

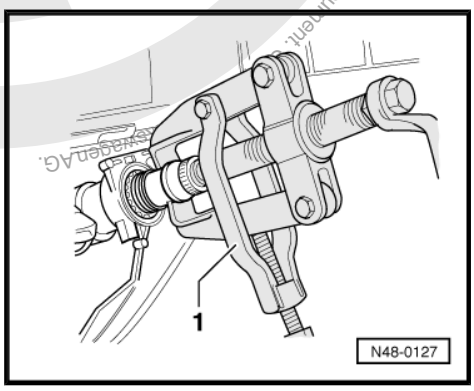

Installing:

– Slide steering lock housing and spring onto steering column (note installation position).

– Remove ignition key and engage steering lock.

– Drive multi-spline adapter sleeve onto steering column with tube -VW 420- -1-.

– Connect multi-pin connector to ignition switch.

– Reconnect immobilizer reader coil connector or reconnect connector to immobilizer control unit.

– Tighten shear-head bolt for steering lock housing until head shears off.

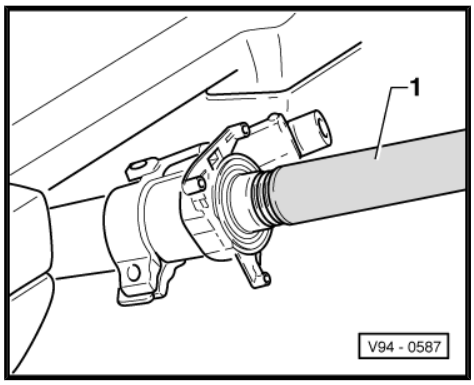

Vehicles with automatic gearbox:

Protected by copyright. Copying for private or commercial purposes, in part or in whole, is not permitted unless authorised by Volkswagen AG. Volkswagen AG does not guarantee or accept any liability with respect to the correctness of information in this document.
satelettronica

– Fit locking cable clip onto locking cable.
– Press locking cable onto ball head.
– Press locking cable with clip into ignition switch support bracket.

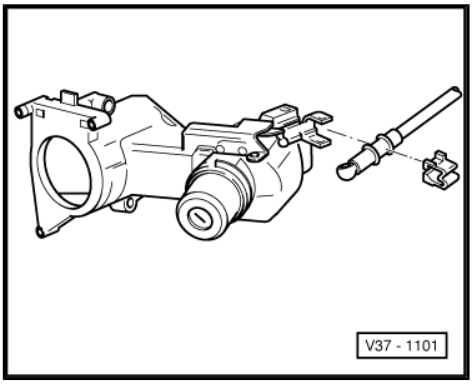

Continuation for all vehicles:

– Install steering column switch ⇒ page 107 .
– Install driver stowage compartment.

8.5 Removing and installing lock cylinder

Removing:

– Remove steering lock housing ⇒ page 110 .

Vehicles with removable immobilizer reader coil:

– Mark drilling hole on steering lock housing.

a - 12 mm

b - 10 mm

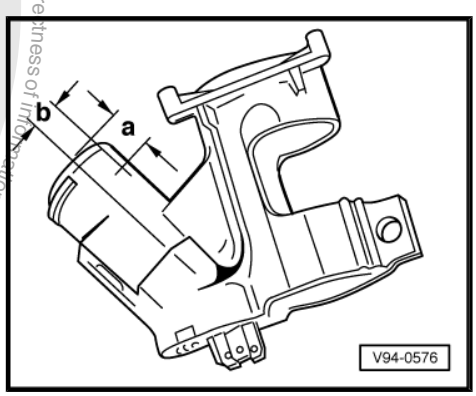

Vehicles with an immobilizer reader coil which is permanently secured to the lock cylinder:

– Mark steering lock housing for drilling.

a - 9.5 mm

b - 10 mm

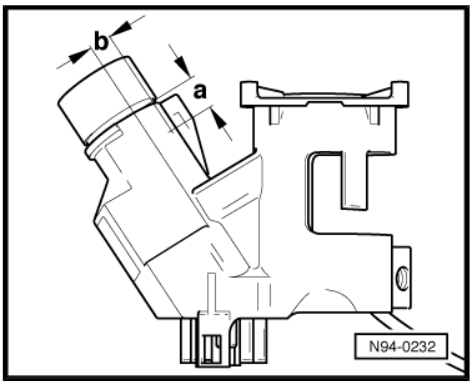

Continuation for all vehicles:

– Drill into steering lock housing (approx. 3 mm), until the lock cylinder spring is evident.
– Using opposite end of drill compress lock spring and pull out lock cylinder.

Installing:

> ⚠ **Caution**
>
> ***Steering lock housing which has been drilled must not be installed again.***

– Push lock cylinder into new steering lock housing.
– By slightly turning key in lock cylinder it can be pushed in onto stop.
– Install steering lock housing ⇒ page 110 .

Copyright by Volkswagen AG. Volkswagen AG does not guarantee or accept any liability with respect to the correctness of information in this document. Copyright by Volkswagen AG. Copying for private or commercial purposes, in part or in whole, is not permitted unless authorised by Volkswagen AG.
satelettronica

8.6 Removing and installing ignition / starter switch

WARNING

Before working on the electrical system disconnect the battery earth strap.

Note

- *If vehicle has a security-coded radio, obtain anti-theft code before disconnecting battery.*
- *When the battery is reconnected, check the vehicle equipment (radio, clock, electrically operated windows) as per Workshop Manual and/or the Owner's Manual.*

Removing:

– Remove steering lock housing ⇒ page 110 .

– Remove securing screw -arrow- and pull ignition and starter switch out of steering lock housing.

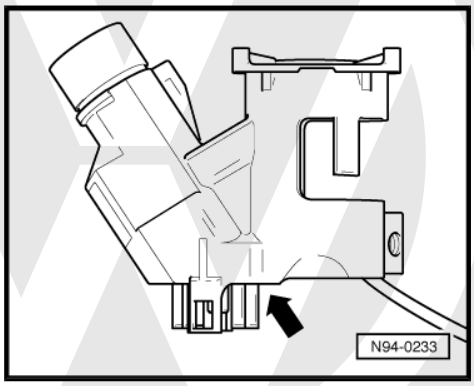

Installing:

– Push ignition switch into steering lock housing.

Note

When installing the ignition switch ensure that the ignition switch and the lock cylinder are in the same position, e.g. "ignition on".

– Tighten securing screw.

– Install steering lock housing ⇒ page 110 .

8.7 Pin assignment for ignition switch

8-pin connector

1 - Terminal 50

2 - Terminal 15

3 - Terminal X

4 - Terminal S

5 - Terminal 30

6 - Terminal P

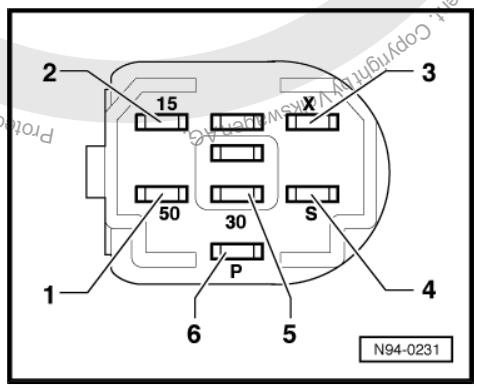

Protected by copyright. Copying for private or commercial purposes, in part or in whole, is not permitted unless authorised by Volkswagen AG. Volkswagen AG does not guarantee or accept any liability with respect to the correctness of information in this document. Copyright by Volkswagen AG.
satelettronica

96 – Lights, bulbs, switches - interior

1 Immobilizer

1.1 Assembly overview - immobilizer

1 - Immobilizer control unit -J362-

Removing and installing
⇒ page 115

2 - Immobilizer reader coil -D2-

Removing and installing
⇒ page 116

3 - Transponder (response-reader memory) integrated in ignition key

4 - Fuel cut-off valve control unit on diesel injection pump

If defective the complete diesel injection pump with the fuel cut-off valve control unit is to be replaced.

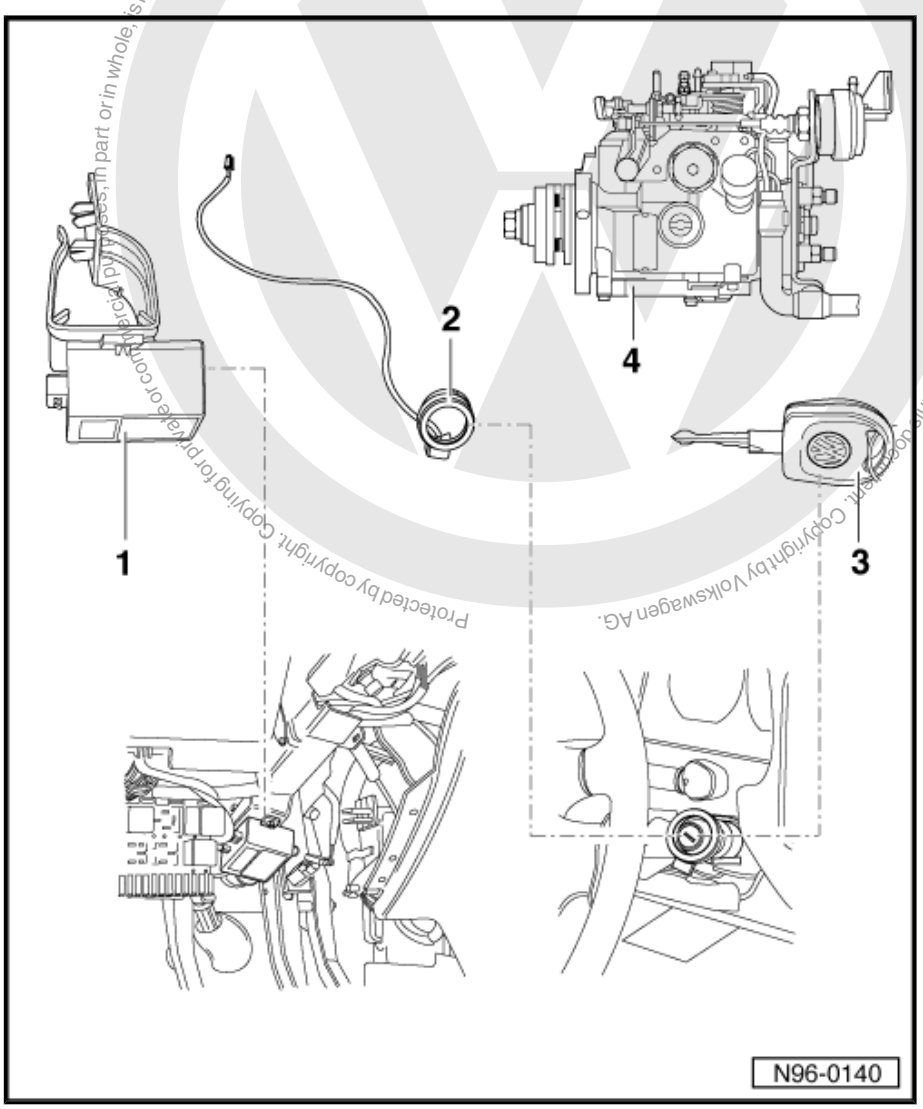

1.2 Removing and installing immobilizer control unit -J362-

The immobilizer control unit -J362- is located on the steering column under the dash panel.

Protected by copyright. Copying for private or commercial purposes, in part or in whole, is not permitted unless authorised by Volkswagen AG. Copyright by Volkswagen AG. We guarantee or accept any liability with respect to the correctness of information in this document.
satelettronica

1.3 Removing and installing immobilizer reader coil -D2-

Note

The immobilizer reader coil -D2- is secured to the lock cylinder housing and cannot be changed individually on later vehicles.

Removing:

– Remove upper and lower trim parts of steering column switch.

– Pull connector off immobilizer control unit.

– Pull reader coil off steering lock housing.

Installing:

Install in reverse order of removal.

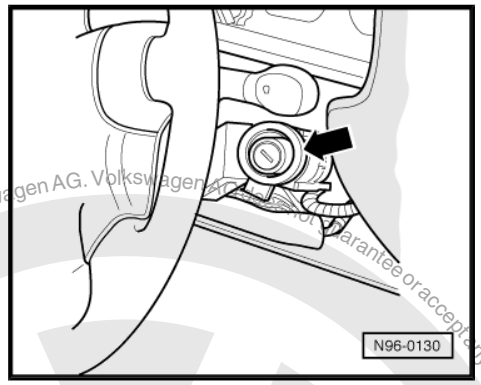

1.4 Transponder

Replacement of transponder (response-reader memory) in ignition key is not possible.

The complete key must always be renewed if the transponder is found to be defective ⇒ page 16 .

Protected by copyright. Copying for private or commercial purposes, in part or in whole, is not permitted unless authorised by Volkswagen AG. Volkswagen AG does not guarantee or accept any liability with respect to the correctness of information in this document. Copyright by Volkswagen AG.
satelettronica

2 Interior lights and switches

2.1 Assembly overview - switches in dash panel

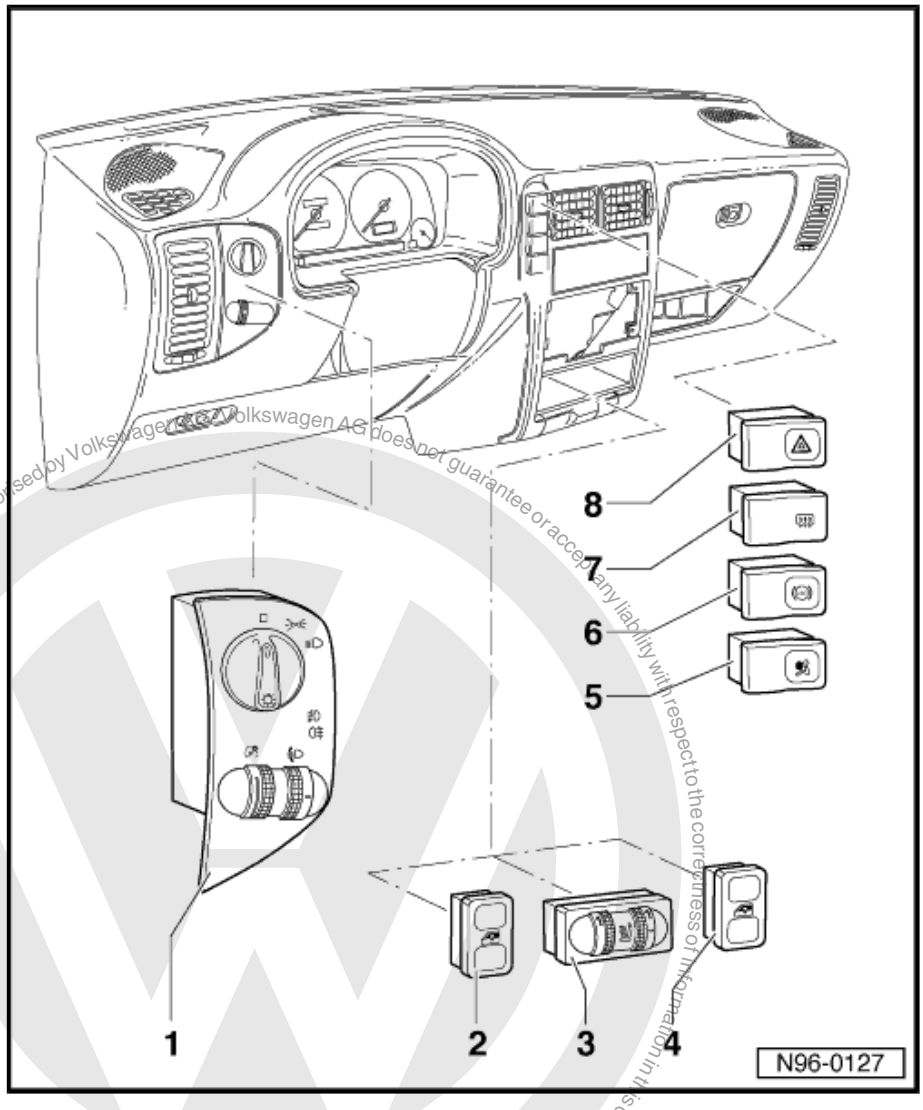

1 - Light switch -E1-

Multi-pin connector for side and driving lights, fog lights and rear fog lights on vehicles with electric headlight range control.

- ❑ Removing and installing ⇒ page 117

2 - Front left window regulator switch -E40-

- ❑ Removing and installing ⇒ page 118

3 - Heated driver seat regulator -E94- and heated front passenger seat regulator -E95-

- ❑ Removing and installing ⇒ page 118

4 - Front right window regulator switch -E41-

- ❑ Removing and installing ⇒ page 118

5 - Warning lamp for airbag -K75-

- ❑ Removing and installing ⇒ page 118

6 - Warning lamp for ABS -K47-

- ❑ Removing and installing ⇒ page 118

7 - Heated rear window switch -E15-

- ❑ Removing and installing ⇒ page 118

8 - Hazard warning light switch -E3-

- ❑ Removing and installing ⇒ page 118

2.2 Removing and installing light switch -E1-

Removing:

– Remove storage compartment on driver side ⇒ General body repairs, interior; Rep. Gr. 68 ; Compartments, covers and trim; Removing and installing compartment on driver side (Caddy, Polo Classic ‣ 09.99, Polo Variant ‣ 09.99) .

Protected by copyright. Copying for private or commercial purposes, in whole or in part, is not permitted unless authorised by Volkswagen AG. Volkswagen AG does not guarantee or accept any liability with respect to the correctness of information in this document. Copyright by Volkswagen AG.
satelettronica

– Push lower retainer -arrow- upwards.

– Pull light switch -E1- out of dash panel.

– Pull off connector.

Installing:

– Reconnect connectors.

– Insert light switch -E1- into dash panel and locate correctly.

– Install storage compartment on driver side ⇒ General body repairs, interior; Rep. Gr. 68 ; Compartments, covers and trim; Removing and installing compartment on driver side (Caddy, Polo Classic ‣ 09.99, Polo Variant ‣ 09.99) .

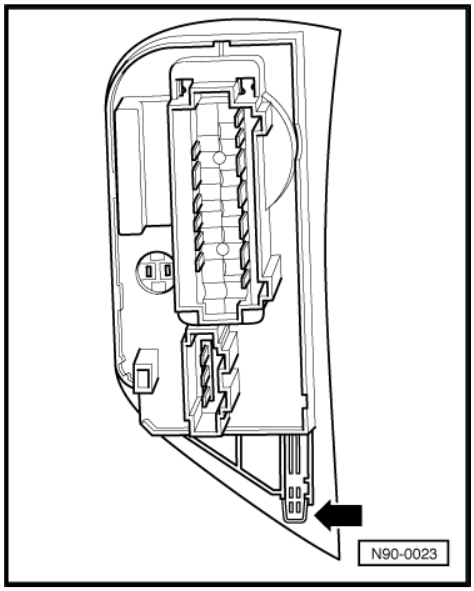

2.3 Removing and installing switches in centre of dash panel

The removal and installation procedure is the same for all switches and only the heated rear window switch -E15- is described here.

Removing:

– Insert flat blade screwdriver between dash panel and switch on right-hand side of switch and carefully release switch.

– Pull off connector.

Installing:

– Reconnect connectors.

– Push switch into mounting in dash panel and ensure it is properly located.

2.4 Interior light

Note

- *Only the lens of the interior light need be removed to replace a bulb.*
- *The interior light must be removed to replace a bulb in the front passenger reading light.*

satelettronica

Protected by copyright. Copying for private or commercial purposes, in part or in whole, is not permitted unless authorised by Volkswagen AG. Volkswagen AG does not guarantee or accept any liability with respect to the correctness of information in this document. Copyright by Volkswagen AG.

2.4.1 Removing and installing interior light

Removing:

– Lever interior light carefully out of roof trim using a flat blade screwdriver.

– Release connectors and pull off.

Installing:

Install in reverse order of removal.

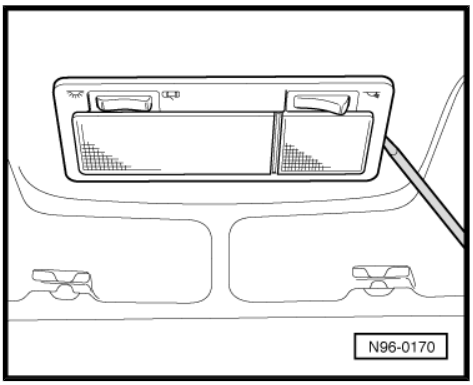

2.4.2 Replacing interior light bulb

– Carefully lever lens off interior light and remove.

– Replace 12 V/10 W festoon bulb.

– Insert lens again and locate properly.

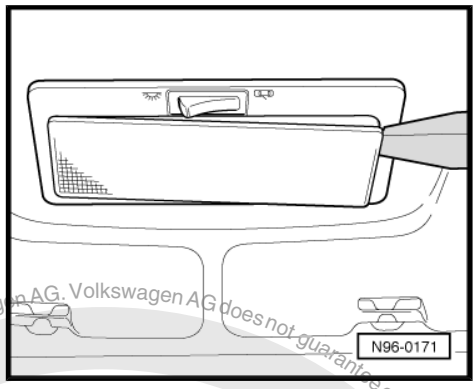

2.4.3 Replacing front passenger reading light bulb

Removing:

– Remove interior light ⇒ page 119 .

– Release holder of glass base bulb by turning to left and pull out of interior light.

– Pull glass base bulb (12 V/5 W) out of holder (do not turn) and replace bulb.

Installing:

– Insert holder of glass base bulb in interior light and secure by turning to right.

– Reconnect connectors.

– Insert interior light in roof trim and locate correctly.

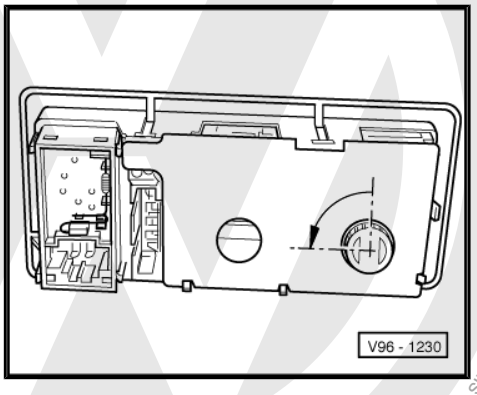

Protected by copyright. Copying for private or commercial purposes, in part or in whole, is not permitted unless authorised by Volkswagen AG. Volkswagen AG does not guarantee or accept any liability with respect to the correctness of information in this document. Copyright by Volkswagen AG.
satelettronica

2.5 Removing and installing glove compartment light -W6-

Removing:

– Insert a flat blade-type screwdriver at top behind lens and carefully lever lens out

– Pull out lens with bulb holder and microswitch

– Replace festoon bulb (12 V/3 W)

Installing:

– Insert lens with bulb holder and microswitch in stowage compartment and locate correctly.

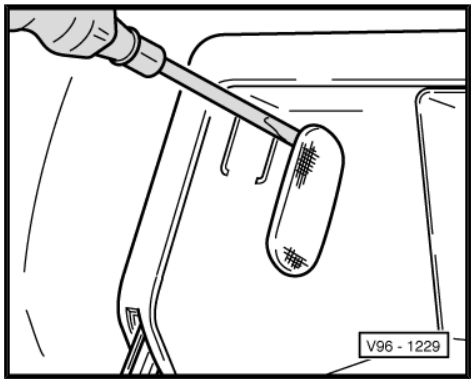

Note

After working on the glove compartment light, a functional check of the switch must be carried out. With the lid closed the lamp must not light!

2.6 Removing and installing door contact switch

The procedure for removal and installation is the same for all door contact switches and is therefore described for just the drivers door contact switch -F2- .

- Driver door contact switch -F2-
- Front passenger door contact switch -F3-
- Rear left door contact switch -F10-
- Rear right door contact switch -F11-

Removing:

– Remove rubber boot -arrow-.

– Carefully lever door contact switch out.

– Release connector.

Installing:

Install in reverse order of removal.

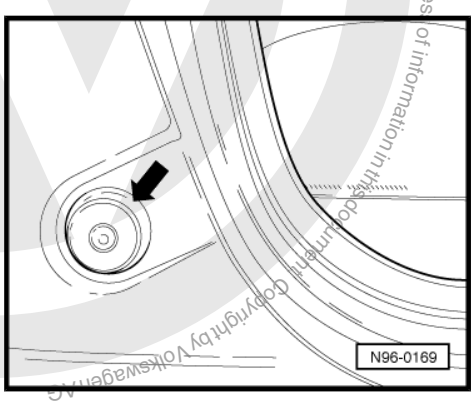

2.7 Removing and installing luggage compartment light switch

Note

The switch is located in the rear lid lock.

Protected by copyright. Copying for private or commercial purposes, in part or in whole, is not permitted unless authorised by Volkswagen AG. Volkswagen AG does not guarantee or accept any liability with respect to the correctness of information in this document. Copyright by Volkswagen AG.
satelettronica

Removing:

– Remove rear lid lock cylinder ⇒ General body repairs, exterior; Rep. Gr. 55 ; Rear lid (Polo Classic, Polo Variant); Removing and installing lock cylinder .

– Pull off connector.

– Release locating lugs on side with a screwdriver whilst simultaneously pulling switch out of rear lid lock

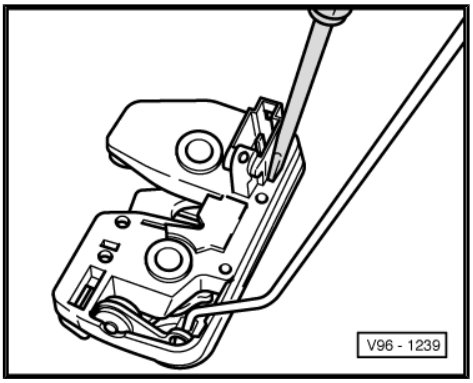

Installing:

– Insert switch in rear lid lock and locate correctly.

– Reconnect connectors.

– Install rear lid lock cylinder ⇒ General body repairs, exterior; Rep. Gr. 55 ; Rear lid (Polo Classic, Polo Variant); Removing and installing lock cylinder .

2.8 Removing and installing luggage compartment light -W3-

Removing:

– Using a screwdriver, push light downwards on light lens until light releases.

– Pull off connector.

– Replace festoon bulb (12 V/3 W)

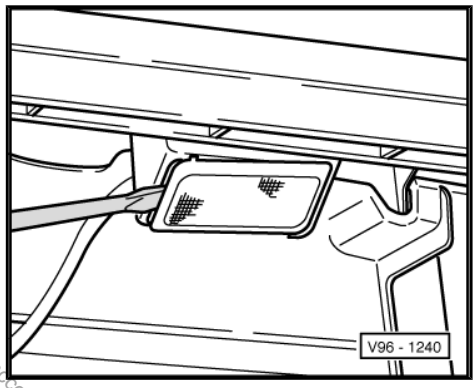

Installing:

Install in reverse order of removal.

Protected by copyright. Copying for private or commercial purposes, in part or in whole, is not permitted unless authorised by Volkswagen AG. Volkswagen AG does not guarantee or accept any liability with respect to the correctness of information in this document. Copyright by Volkswagen AG.

satelettronica

97 – Wiring

1 Removing and installing relay plate, coupling station and fuse holder

WARNING

Before working on the electrical system disconnect the battery earth strap.

Note

- *If vehicle has a security-coded radio, obtain anti-theft code before disconnecting battery.*
- *When the battery is reconnected, check the vehicle equipment (radio, clock, electrically operated windows) as per Workshop Manual and/or the Owner's Manual.*

1.1 Removing and installing relay plate

Removing:

– Remove storage compartment on driver side ⇒ General body repairs, interior; Rep. Gr. 68 ; Compartments, covers and trim; Removing and installing compartment on driver side (Caddy, Polo Classic ‣ 09.99, Polo Variant ‣ 09.99) .

– Release securing clips -1- from pins -3- on left and right of relay plate and swing upwards.

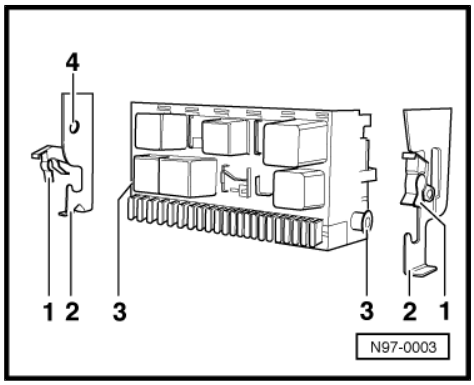

– Press left retaining arm -2- outwards, until the locking device on the relay plate is pulled out of the hole -4- of the retaining arm. Then unhook relay plate.

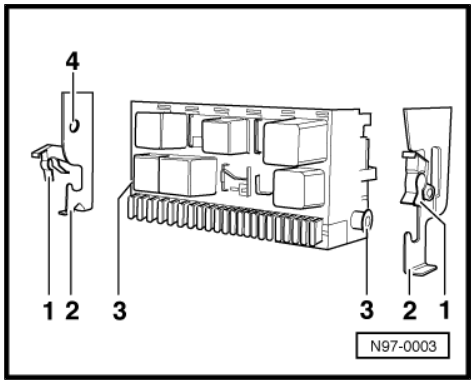

Installing:

When installing, ensure the relay plate locking device engages in the hole -4- of the retaining arm. The securing clips -1- engage on the pins -3-.

– Install storage compartment on driver side ⇒ General body repairs, interior; Rep. Gr. 68 ; Compartments, covers and trim; Removing and installing compartment on driver side (Caddy, Polo Classic ‣ 09.99, Polo Variant ‣ 09.99) .

Protected by copyright. Copying for private or commercial purposes, in part or in whole, is not permitted unless authorised by Volkswagen AG. Volkswagen AG does not guarantee or accept any liability with respect to the correctness of information in this document. Copyright by Volkswagen AG.
satelettronica

1.2 Removing and installing multi-pin connector on back of relay plate

Note

Multi-pin connector pin assignment ⇒ Current flow diagrams, Electrical fault finding and Fitting locations.

Removing:

– Pull locking slide -1- on back of relay plate out of housing to stop (approx. 5 mm) -arrow-.

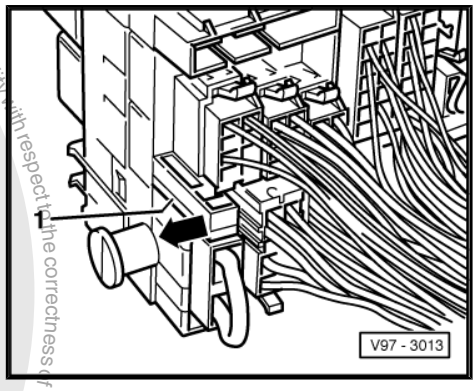

– Press fasteners on multi-pin connector -arrow- and pull multi-pin connector out of relay plate.

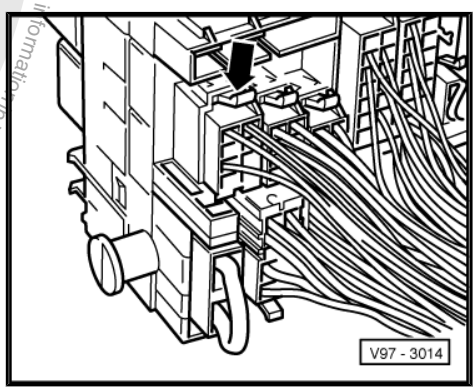

Installing:

Note

Insert multi-pin connector so that the locking pins -2- face towards the locking slide -1-.

– Insert multi-pin connector into respective slot to stop so that locking pin -2- is inserted into cut-out -4- and press inwards until locking lug -3- engages.

– Press locking slide -1- to stop -arrow-. This is only possible when all multi-pin connectors are installed so that each locking lug -3- is inserted and engaged.

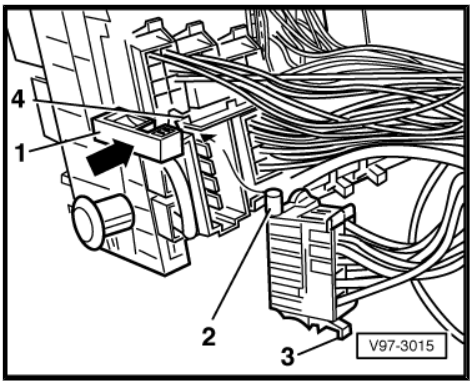

Protected by copyright. Copying for private or commercial purposes, in part or in whole, is not permitted unless authorised by Volkswagen AG. Volkswagen AG does not guarantee or accept any liability with respect to the correctness of information in this document. Copyright by Volkswagen AG.
satelettronica

2 Wiring harness and connector repairs

2.1 Notes on safety

Caution

For repair work on airbag and seat belt tensioner wiring harnesses, only contacts, connectors and wiring designed specifically for this purpose may be used ⇒ Parts catalogue!

- Observe country-specific regulations.
- Observe vehicle stickers indicating high voltage components. Before carrying out repairs, discharge residual voltage.
- Wires from airbag and belt tensioner wiring harness should only be repaired using wiring harness repair set -V.A.G 1978- .

⇒ Operating instructions from wiring harness repair set -V.A.G 1978-

⇒ Body; General body repairs, interior; Rep. Gr. 69 ; Passenger protection

2.2 General notes concerning repairs to vehicle electrical system

- Observe current instructions (also notes concerning removing and installing components) in workshop manuals and in the Technical Service Handbook.
- Yellow wiring and sections of wiring harness wrapped in yellow tape indicate a prior repair.

⇒ Operating instructions from wiring harness repair set -V.A.G 1978-

- Before beginning repairs to a wiring harness, first rectify the cause of the damage, e.g. sharp edges on a body part, defective electrical consumer, corrosion.
- Disconnecting the battery earth strap (open circuit) provides a safe working environment for repairs to the electrical system. The battery positive wire need only be disconnected for removal of the battery.
- To disconnect and connect the battery, the procedure described in the workshop manual should be strictly adhered to .
- If possible, do not loosen any earth wires from the body (danger of corrosion).

2.3 Notes on repairs to wiring harness and connectors

Supplementary notes on repair of CAN bus wiring ⇒ page 125

- Soldering is not permitted for repairs to vehicle wiring.
- Never repair any welded connections. If necessary, lay wiring parallel to the defective wiring.
- Wiring harness and connector repairs to vehicle electrical system should be carried out using wiring harness repair set -V.A.G 1978- only.

Protected by copyright. Copyright by Volkswagen AG. Volkswagen AG does not guarantee or accept any liability with respect to the correctness of information in this document. Copyright by Volkswagen AG. Unauthorised use, copy or publication is not permitted for commercial purposes.
satelettronica

⇒ Operating instructions from wiring harness repair set -V.A.G 1978-

- Perform wiring harness repairs only with yellow wires. Mark repair locations with yellow tape.
- Screened wires must not be repaired. If damaged they must be replaced complete.

2.4 Supplementary notes on repair of CAN bus wiring

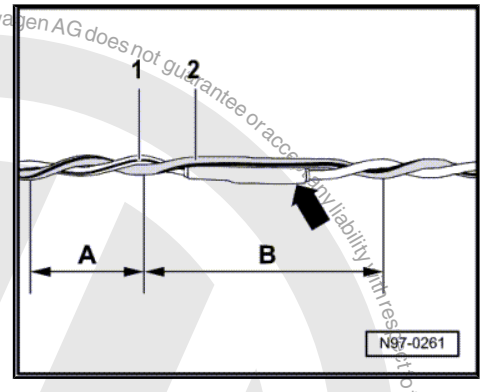

- An unshielded two-wire line -1- and -2- with a cross section of 0.35 mm^2 or 0.5 mm^2 is used for CAN bus wiring.
- The colour codes of the CAN bus wiring can be gleaned from the following table:

Powertrain CAN, high	orange/black
Convenience CAN, high	orange/green
Infotainment CAN, high	orange/violet
CAN low wire, (all)	orange/brown

- Perform wiring harness repairs only with yellow wires. Mark repair locations with yellow tape.
- When repairs are performed, both bus wires must have the same length. When wires -1- and -2- are twisted together, the twist spacing should be A=20 mm.
- No section of wiring greater than B=50 mm, e.g. in the vicinity of heat-shrink sleeves -arrow-, should not be twisted.

2.5 Wiring harness repair set -V.A.G 1978-

Protected by copyright. Copyright by Volkswagen AG.

satelettronica

- Repairs to wiring harnesses and connectors of the onboard electrical supply system should only be carried out using wiring harness repair set -V.A.G 1978- .

- Included with the wiring harness repair set -V.A.G 1978- is a set of operating instructions, which provides comprehensive information on how to conduct repairs.

- Further information, e.g. removal and installation of parts and components, appears in the relevant workshop manual.

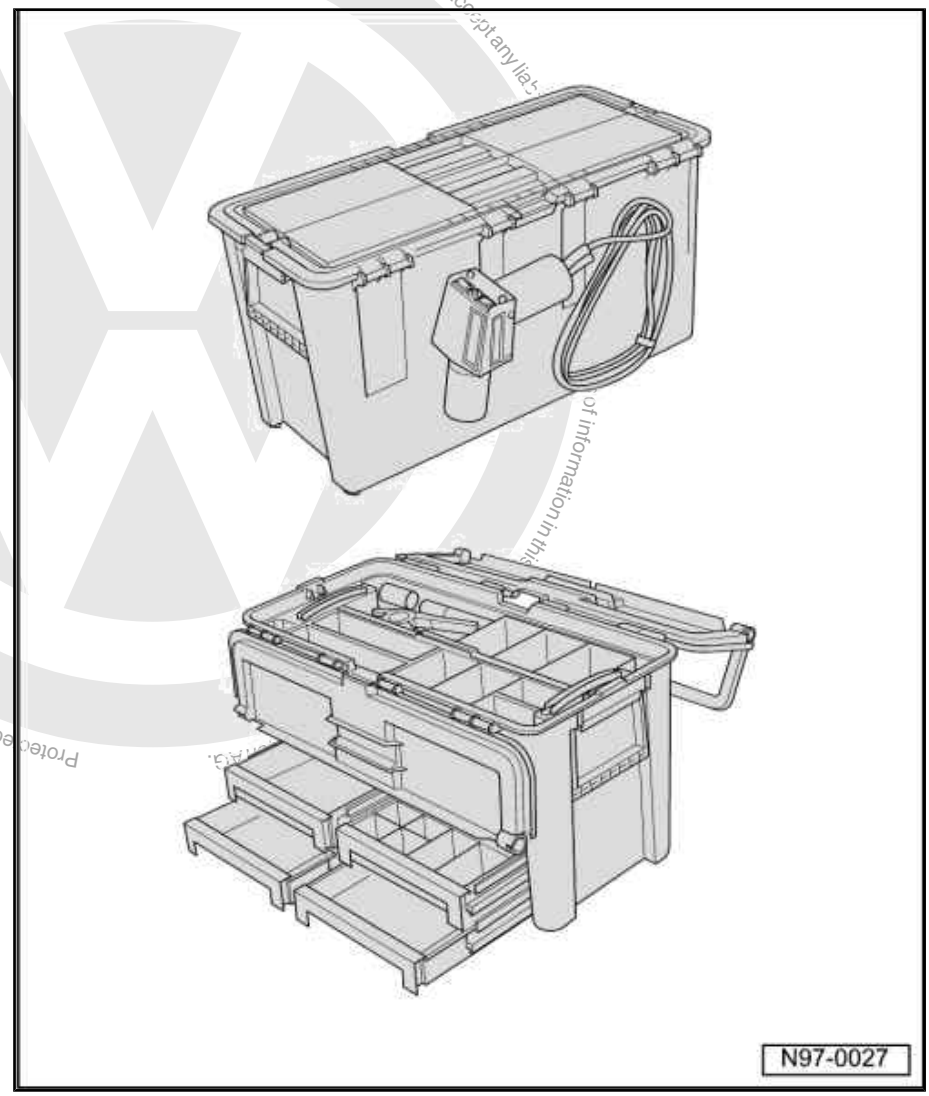

Protected by copyright. Copying for private or commercial purposes, in part or in whole, is not permitted unless authorised by Volkswagen AG. Volkswagen AG does not guarantee or accept any liability with respect to the correctness of information in this document. Copyright by Volkswagen AG.

satelettronica

3 Renewal of aerial wiring

A new repair concept has been developed for repair work on aerial wires. Now connecting wires in different lengths and various adapter cables are available as replacement parts instead of a complete aerial wire.

3.1 General description

- Aerial wires must not be repaired, but if repair is required, they must be replaced only by connecting wires and adapter cables offered as genuine parts.
- Replacement parts can be found in the electronic parts catalogue (EKTA): Special catalogue; Electrical connections; Genuine accessories; Subgroup 35 from illustration No. 035-20.
- These genuine parts are suitable for all aerial wires and wire diameters which may need to be replaced.
- No provision has been made for replacement of individual aerial connectors in the event of repair.
- The wires can be used retroactively for all VW models, with all installed aerial wire diameters.
- All adapter and connection wires are suitable for all transmitter and receiver signals.
- This repair method can also be used for testing or retrofitting.

3.2 Assembly overview - aerial wire

Example – aerial cable between radio and aerial is defective. The following wires are required for the repair:

1 - Adapter cable, to radio connection. Length approx. 30 cm.

2 - Connecting wire, available in different lengths.

3 - Adapter cable, to aerial connection. Length approx. 30 cm.

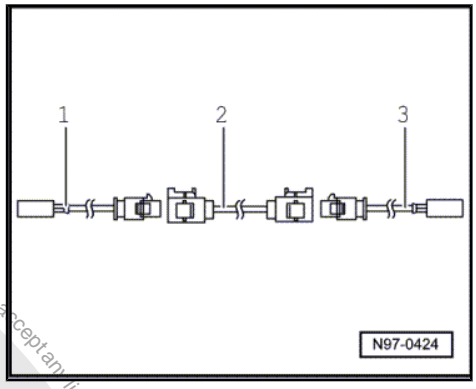

3.3 Installing a new aerial wire

Note

Note that the total length of an aerial cable, depending on vehicle equipment level, can be divided into sections by aerial diversity control unit, traffic information control unit or aerial amplifier. Only the defective section of aerial wire must be replaced.

– Pull defective aerial wire connections off units.

– Determine the routing of the defective aerial wire in vehicle and measure the total length of the aerial connecting wire to be replaced.

Protected by copyright. Copying for private or commercial purposes, in whole or in part, is not permitted unless authorised by Volkswagen AG. Volkswagen AG does not guarantee or accept any liability with respect to the correctness of information in this document. Copyright by Volkswagen AG.

satelettronica

Protected by copyright. Copyright by Volkswagen AG. Volkswagen AG does not guarantee or accept any liability with respect to the correctness of information in this document. Copyright by Volkswagen AG. Copying for private or commercial purposes, in part or in whole, is not permitted unless authorised by Volkswagen AG.

The total length of aerial connecting wire is the sum of the length of adapter cables required -1- and -3- and the connecting wire -2-.

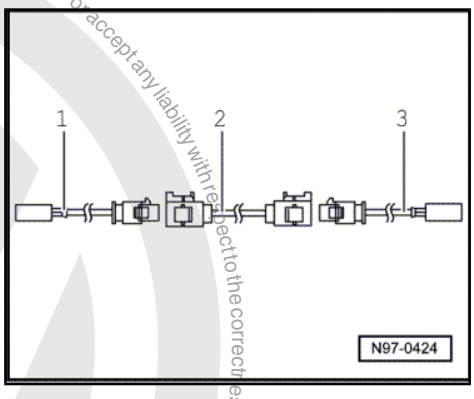

– To determine the length of connecting wire required, subtract 60 cm from the measured total length of aerial connecting wire -2-.
– Procure the required adapter cables -1- and -3- and connecting wire -2- at length calculated as genuine part from the parts catalogue.
– Cut off connectors of defective aerial wire.

The remainder of the defective aerial wire remains in the vehicle.

– Connect adapter cables -1- and -3- to equipment in vehicle.
– Route and secure connecting wire -2- parallel to the old aerial wire.

Note

Do not kink or excessively bend aerial wires! The bending radius must not be below 50 mm.

– Connect connecting wire to adapter cables.
– Perform a functional check.

satelettronica